PNEUMATIC PIN PACKAGES

Sizing and Application Chart

Pin Packages

Series	Page PC-PKG-#	Pushing Force at 5 bar [72 psi] N [lbf]					Retracting Force at 5 bar [72 psi] N [lbf]					Piston Ø mm [in]				Stroke mm [in]				Weight Kg [lb]				Applications			Features		
		0 to 500 [0 to 112]	500 to 1000 [112 to 225]	1000 to 2000 [225 to 450]	2000 to 3000 [450 to 674]	3000 to 4000 [674 to 899]	0 to 500 [0 to 112]	500 to 1000 [112 to 225]	1000 to 2000 [225 to 450]	2000 to 3000 [450 to 674]	3000 to 4000 [674 to 899]	30 [1.18]	40 [1.57]	50 [1.97]	63 [2.48]	20 [0.79]	40 [1.57]	60 [2.36]	80 [3.15]	0 to 2 [0 to 4.41]	2 to 4 [4.41 to 8.82]	4 to 6 [8.82 to 13.23]	6 to 8 [13.23 to 17.64]	Welding	Assembly	Machining	Duty Cycle	Dual Pin	Ceramic Coated Pin	Toggle Locking (Extended)
86P30-5	1	●					●					●				●—●				●				○	○	○	○			
86P40-2	5		●					●					●			●—●				●				○	○	○	○		✓	
86P60-2	5			●					●						●	●—●					●			○	○	○	○		✓	
56H40-2	15												●			●—●					●			○	○	○	○		✓	✓
85P5-1	25			●				●						●			●				●			○	○	○	○		✓	✓
85D5-2	31				●				●					●			●						●	○	○	○	○	✓		✓
86D40-1	35		●					●					●			●—●				●				○	○	○	○	✓	✓	
86D60-1	35			●					●						●	●—●					●			○	○	○	○	✓	✓	
56D60-1	41														●	●—●						●		○	○	○	○	✓	✓	

○ Excellent/High ○ Fair/Medium ● Poor/Low ⊗ Not Recommended

DESTACO a DOVER company

86P30-5

Pneumatic Pin Package | Single Shaft | Ordering and Technical Information

86P30-5 | **02** | **L8** | **00** | **4**

Accessories	Description
00	No Accessories

Stroke	Description
2	20 mm Stroke
4	40 mm Stroke

Piston Rod	Description
02	Ø16 mm M6 Threaded Inside Hole, Cross Groove
05	Ø10 mm M8 Threaded Inside Hole, Cross Groove

Sensor	Description
L8	PNP Sensor with In-line M12x1 Connector (8EA-146-4)
N8	NPN Sensor with In-line M12x1 Connector (8EA-154-4)
L9	PNP Sensor with 90° M12x1 Connector (8EA-147-4)
N9	NPN Sensor with 90° M12x1 Connector (8EA-155-4)
K8	PNP Sensor with M12x1 Cable Connector (8EA-158-4)
K9	NPN Sensor with M12x1 Cable Connector (8EA-167-4)

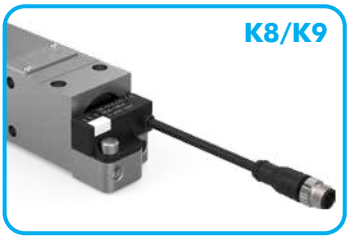

Sensor Cables Order separately

Order No.	Description
8EL-002-1	M12x1, Straight, 5-pin Connector with 5 m [16 ft.] Cable
8EL-003-1	M12x1, Angular, 4-pin Connector with 5 m [16 ft.] Cable

	86P30-5
Stroke Option:	**2, 4**
Max Pushing Force at 5 bar [72 psi]:	340 N [76 lbf]
Max Retracting Force at 5 bar [72 psi]:	250 N [56 lbf]

Dimensions and technical information are subject to change without notice

86P30-5

Pneumatic Pin Package | Single Shaft | Dimensions and Technical Specifications

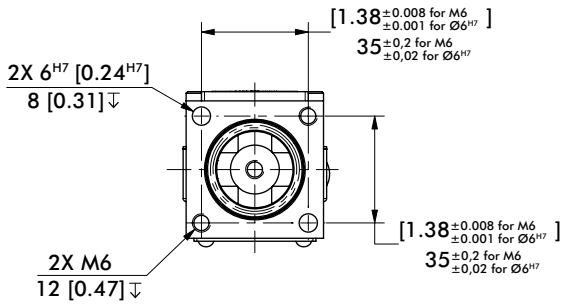

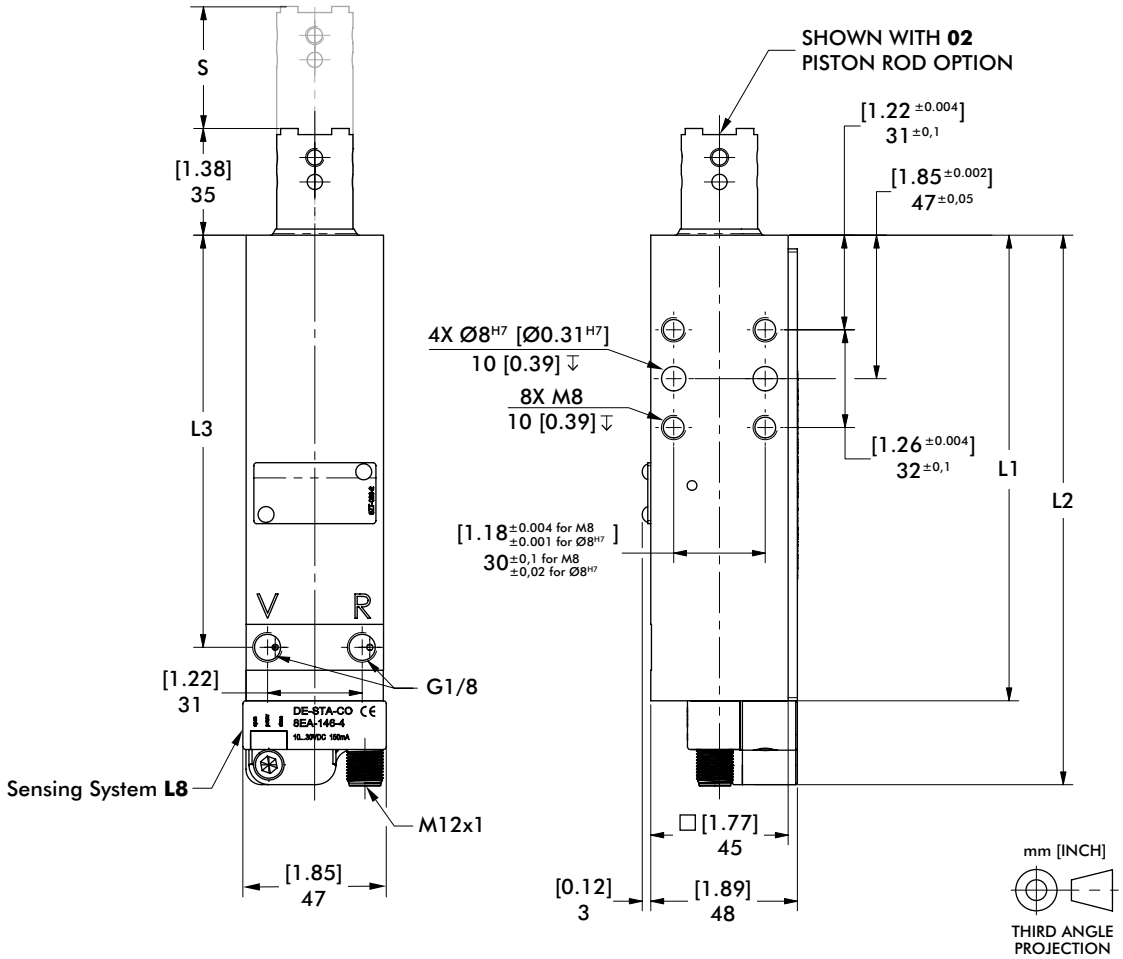

Medium: Operation with oil free air permissible

Base Model	Stroke Option	S Stroke mm [in]	L1 mm [in]	L2 mm [in]	L3 mm [in]	Pushing force at 5 bar N [lbs]	Retraction force at 5 bar N [lbs]	Max. operating pressure bar [psi]	Piston Ø mm [in]	Weight Kg [lbs]	Air consumption per double stroke at 5 bar dm^3 [ft^3]
86P30-5	2	20 [0.79]	112,5 [4.43]	140 [5.51]	95 [3.74]	340 [76]	250 [56]	6 [87]	30 [1.18]	0,8 [1.76]	0,32 [0.011]
	4	40 [1.57]	152,5 [6.00]	180 [7.09]	135 [5.30]					1 [2.20]	0,45 [0.015]

86P30-5 PISTON RODS

Pneumatic Pin Package | Single Shaft | Dimensions and Technical Specifications

02 Ø16 mm M6 Threaded Inside Hole, Cross Groove

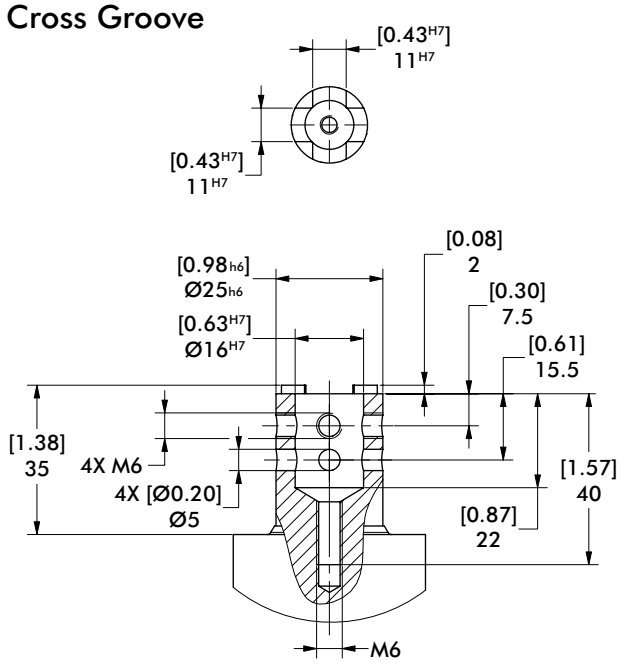

05 Ø10 mm M8 Threaded Inside Hole, Cross Groove

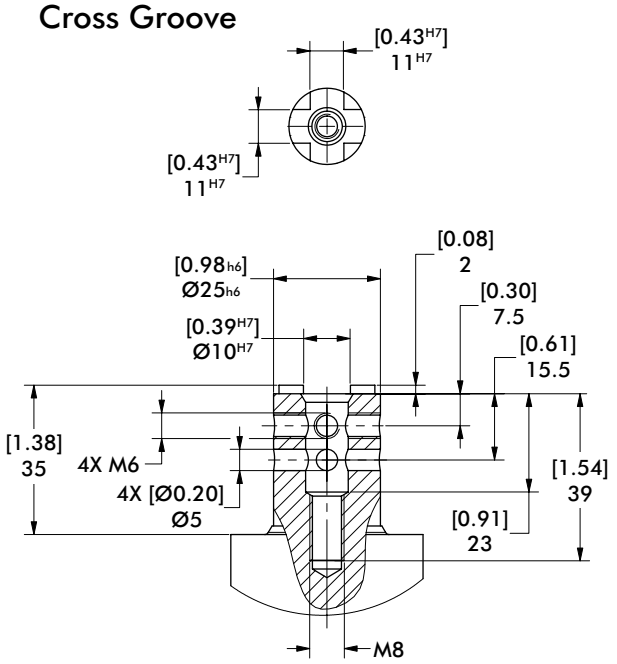

Max Deflection for Centering Pin

Model no.	Shear force N [lbs]	L mm [in]	Stroke mm [in]	Deflection ± mm [in]
86P30-50***004	200 [45]	75 [2.95]	40 [1.58]	0,12 [0.0047]
	150 [34]			0,10 [0.0039]
	100 [22]			0,08 [0.0031]
	75 [17]			0,06 [0.0023]
86P30-50***002	200 [45]	55 [2.17]	20 [0.79]	0,07 [0.0027]
	150 [34]			0,06 [0.0023]
	100 [22]			
	75 [17]			0,05 [0.0019]

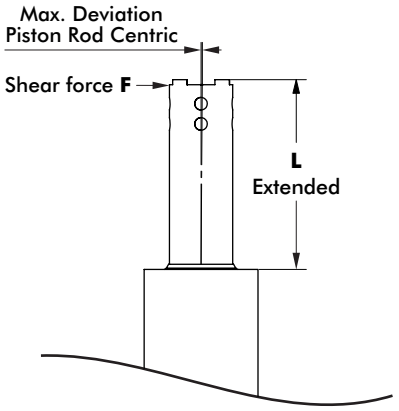

Angle Deviation and Air Consumption

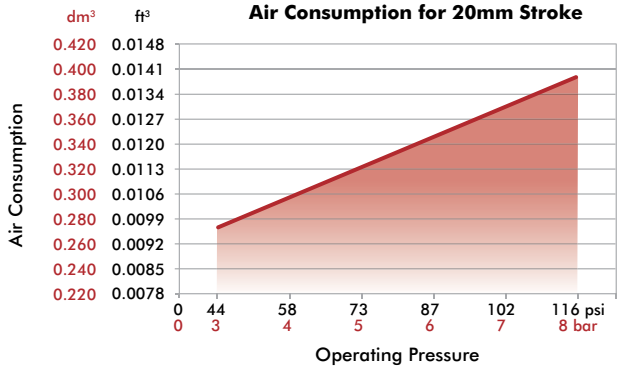

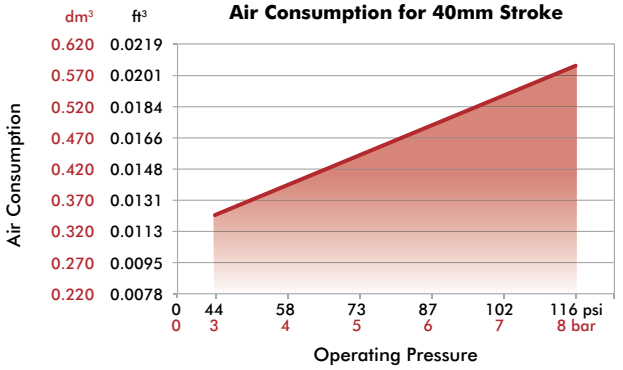

Dimensions and technical information are subject to change without notice

Pneumatic Pin Package | Single Shaft | Dimensions and Technical Specifications

L8, N8 Inductive Sensing System

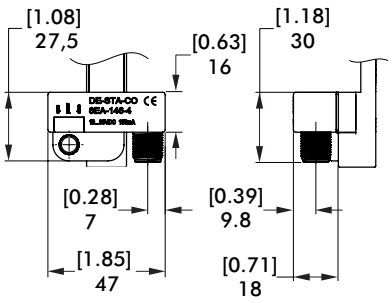

L9, N9 Inductive Sensing System with 90° Connector

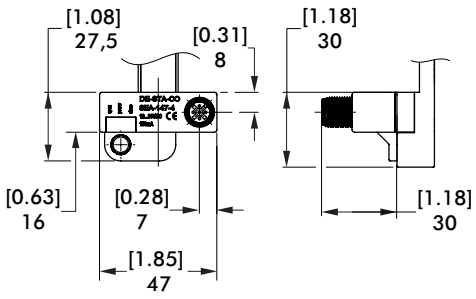

K8, K9 Inductive Sensing System with Pigtail Connector

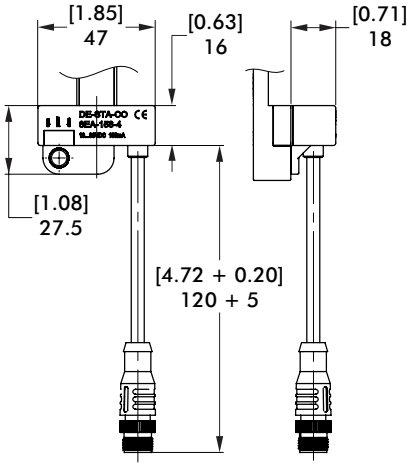

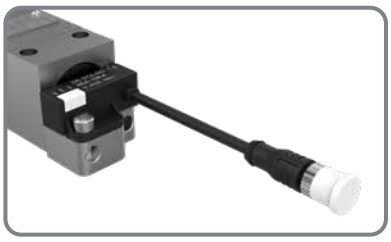

Inductive Sensor Wiring Diagram

Sensing system immune to interference from AC / DC arc welding.

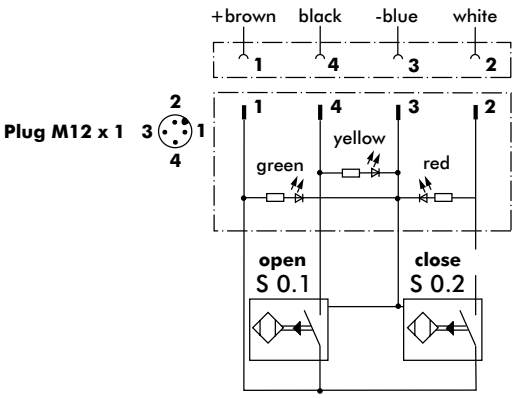

Sensor Cable Accessories

Sensor Cables (1 connector & 5m cable)	Order no.
M12x1 connector, straight, 5-pin	**8EL-002-1**
M12x1 connector, 90° angular, 4-pin	**8EL-003-1**

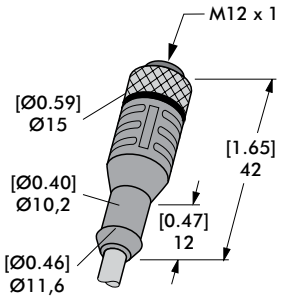

Straight Cable
8EL-002-1

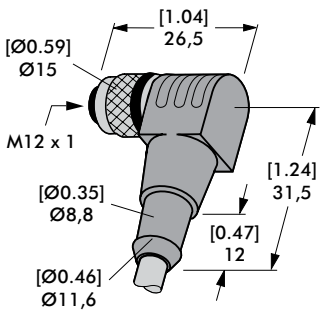

Angular Cable
8EL-003-1

86P40/86P60

Pneumatic Pin Package | Single Shaft | Ordering and Technical Information

86P40 | **-2** | **02** | **C8** | **G1** | **A** | **-K** — Ceramic Option for Piston Rod: **K**

Base Model	Description
86P40	40 mm Cylinder (G1/8 Port)
86P60	63 mm Cylinder (G1/4 Port)

Hand Lever	Description
-2	No Handle
H2	Handle for Manual Control for 86P60 only (excludes **F, 8** stroke option)

Piston Rod	Description
01	Ø16 mm Inside Hole (Standard)
02	Ø16 mm M6 Threaded Inside Hole, Cross Groove
04	NAAMS Standard
A4	NAAMS Standard Rotated 180°
B4	NAAMS Standard Rotated 90°
C4	NAAMS Standard Rotated 270°
05	Ø10 mm Inside Hole, Cross Groove
07	Ø16 mm Inside Hole, NAAMS
09	Ø20 mm Straight Groove
10	Ø12 mm Straight Groove

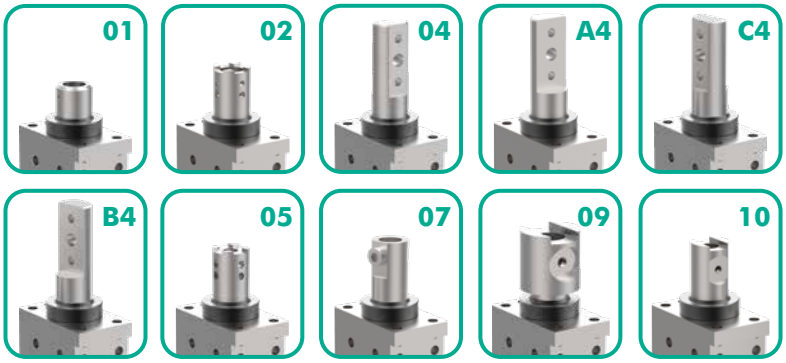

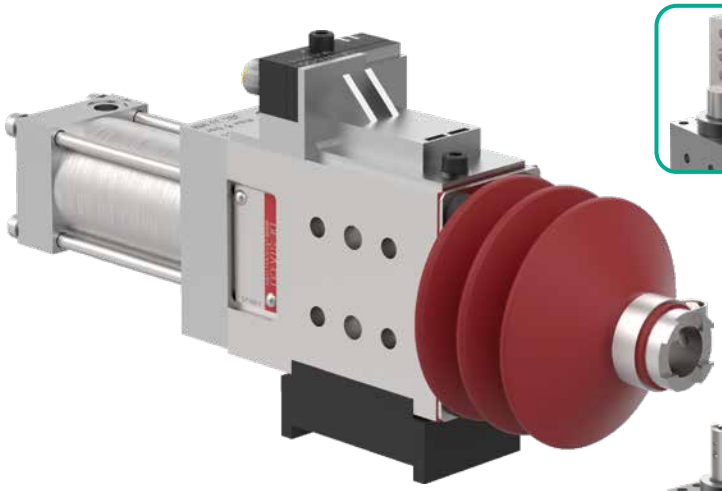

Stroke Option:	86P40 A, B, 2, 4	86P40 C, 6	86P40 F, 8	86P60 A, B, 2, 4	86P60 C, 6	86P60 F, 8
Max Pushing Force at 5 bar [72 psi]:	620 N [139 lbf]			1550 N [348 lbf]		
Max Retracting Force at 5 bar [72 psi]:	520 N [117 lbf]			1400 N [315 lbf]		

Dimensions and technical information are subject to change without notice

Stroke	Description
	Anti-Twist Device/Low Accuracy
B	20 mm Stroke (8MF-071-1)
A	40 mm Stroke (8CE-231-1)
C	60 mm Stroke (8CE-231-1)
F	80 mm Stroke (8CE-231-1)
	Anti-Twist Device
2	20 mm Stroke (86P0-20000002)
4	40 mm Stroke (86P0-20000004)
6	60 mm Stroke (86P0-20000006)
8	80 mm Stroke (86P0-20000008)

Accessories	Description
00	No Accessories
H1	Adaptor (86P0-20000H1)
E1	External Guide for **A, B** (82ZB-009-2, Ceramic 82ZB-181-1)
E2	External Guide for **C** (82ZB-090-1, Ceramic 82ZB-105-1)
E4	External Guide for **F** (82ZB-180-1, Ceramic 82ZB-179-1)
J1	External Guide for **A, B** (82ZB-184-1, Ceramic 82ZB-183-1) + Adaptor (86P0-20000H1)
F1	Bellows for piston rods **02, 05, 07, 10** in strokes **A, B, 2, 4** (82ZB-013-3)
G1	Bellows **F1** + Adaptor **H1** for piston rods **02, 05, 07, 10** in strokes **A, B, 2, 4**

Sensor	Description
L4	Cover Plate for **A, B, 2, 4** (86P0-200L4)
L6	Cover Plate for **C, 6** (86P0-200L6)
L8	Cover Plate for **F, 8** (86P0-200L8)
C8	Inductive Sensing System with M12x1 Connector for **A, B, 2, 4** (86P0-200C8), for **C, 6** (86P0-200C8006), for **F, 8** (86P0-200C8008)
D8	Inductive Sensing System with 90° M12x1 Swivel Connector for **A, B, 2, 4** (86P0-200D8) for **C, 6** (86P0-200D8006), for **F, 8** (86P0-200D8008)

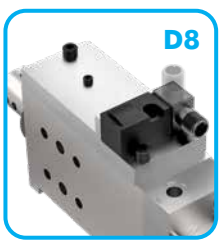

86P40-2/86P60-2

Pneumatic Pin Package | Single Shaft | Dimensions and Technical Specifications

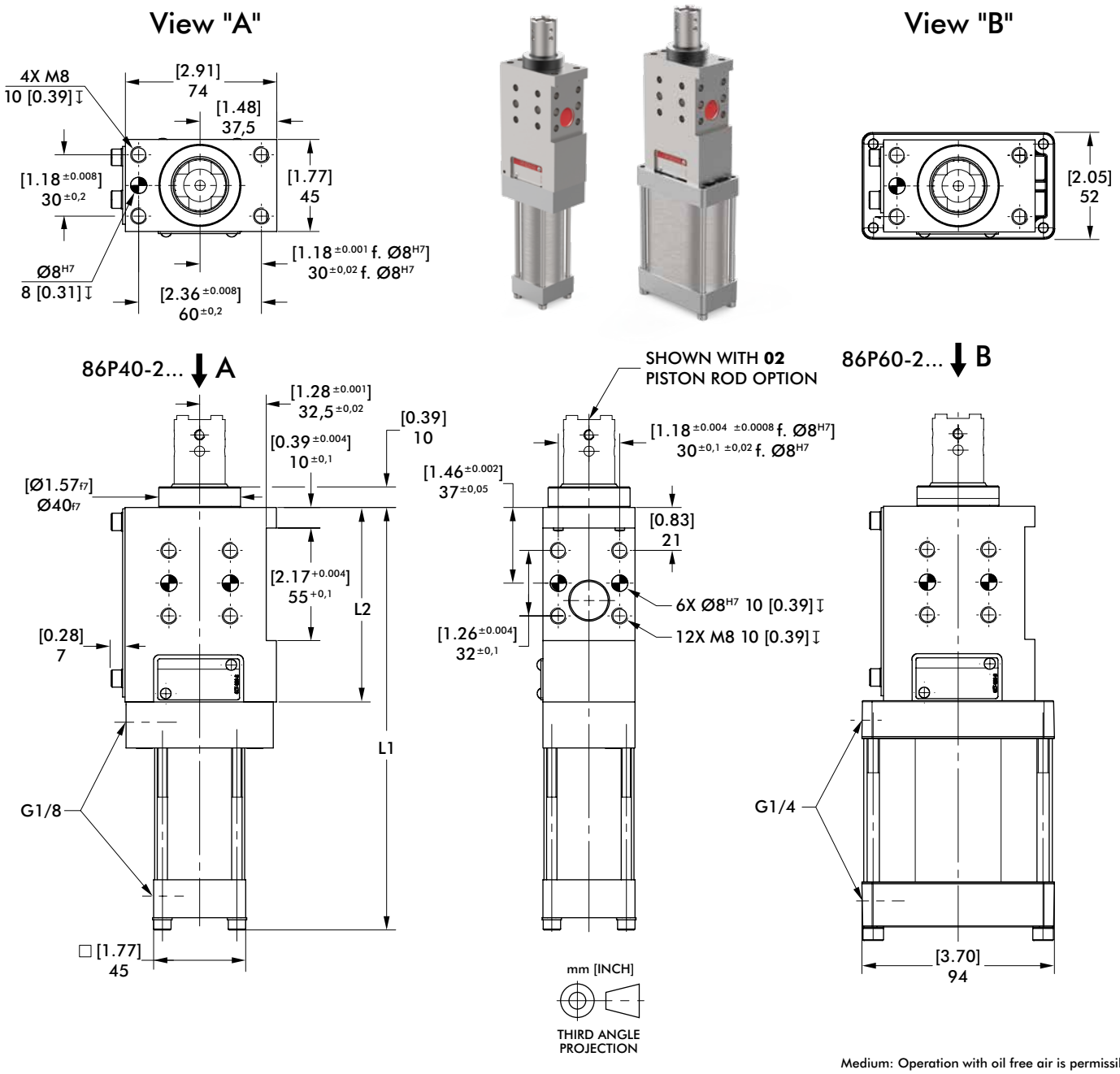

Medium: Operation with oil free air is permissible

Base Model	Stroke Option	Stroke +2 [0.08] mm [in]	L1 mm [in]	L2 mm [in]	Pushing force at 5 bar N [lbs]	Retraction force at 5 bar N [lbs]	Max. operating pressure bar [psi]	Piston Ø mm [in]	Weight Kg [lbs]	Air consumption per double stroke at 5 bar dm^3 [ft^3]
86P40	B, 2	20 [0.79]	207 [8.15]	95 [3.74]	620 [139]	520 [117]	6 [87]	40 [1.57]	1,6 [3.52]	0,5 [0.017]
	A, 4	40 [1.57]								0,7 [0.025]
	C, 6	60 [2.36]	247 [9.72]	115 [4.53]					2,0 [4.40]	0,9 [0.032]
	F, 8	80 [3.15]	287 [11.30]	135 [5.31]					2,4 [5.29]	1,0 [0.035]
86P60	B, 2	20 [0.79]	213 [8.39]	95 [3.74]	1550 [348]	1400 [315]		63 [2.48]	2,0 [4.40]	0,8 [0.028]
	A, 4	40 [1.57]								1,4 [0.049]
	C, 6	60 [2.36]	253 [9.96]	115 [4.53]					2,5 [5.51]	2,0 [0.070]
	F, a8	80 [3.15]	293 [11.54]	135 [5.31]					2,8 [6.17]	2,5 [0.088]

86P60H2

Pneumatic Pin Package | Single Shaft | Dimensions and Technical Specifications

With Handle for Manual Control

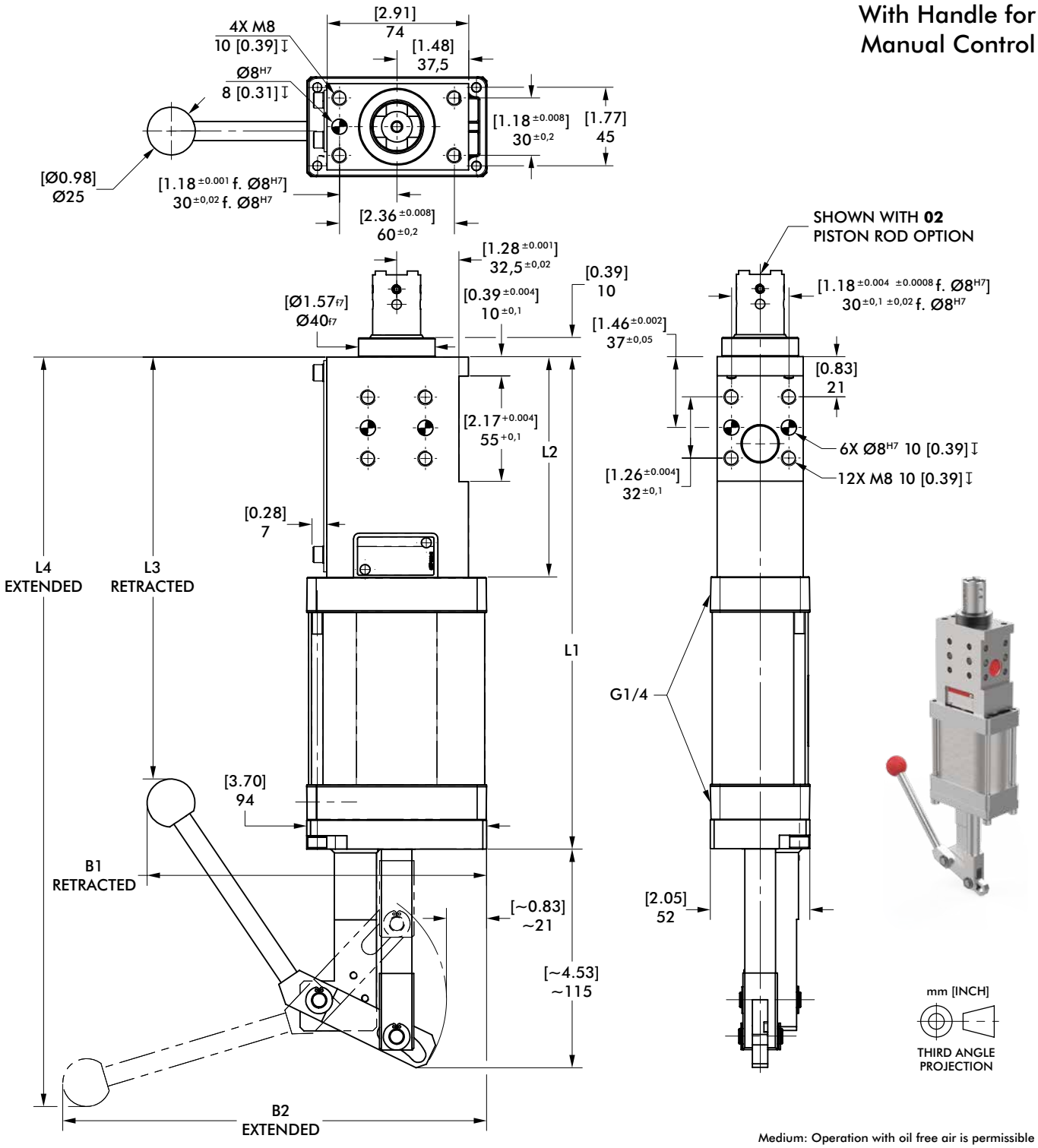

Medium: Operation with oil free air is permissible

Base Model	Stroke Option	Stroke +2 [0.08] mm [in]	B1 (retracted) mm [in]	B2 (extended) mm [in]	L1 mm [in]	L2 mm [in]	L3 (retracted) mm [in]	L4 (extended) mm [in]	Weight Kg [lbs]
86P60H2	B, 2	20 [0.79]	177 [6.97]	216 [8.50]	217 [8.54]	95 [3.74]	179 [7.05]	253 [9.96]	2,3 [5.07]
	A, 4	40 [1.57]		229 [9.02]				306 [12.05]	
	C, 6	60 [2.36]		222 [8.74]	257 [10.12]	115 [4.53]	220 [8.66]	392 [15.43]	2,6 [5.73]

86P40/86P60 PISTON RODS

Pneumatic Pin Package | Single Shaft | Dimensions and Technical Specifications

01 Ø16 mm Inside Hole

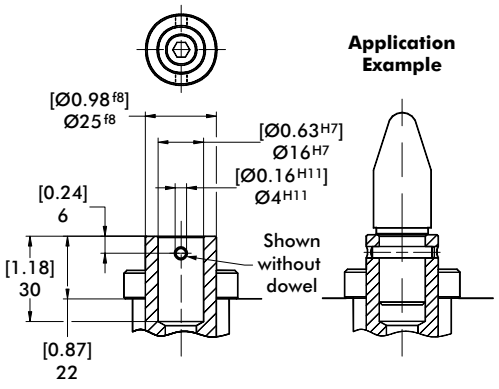

Piston rod shown retracted

02 Ø16 mm M6 Threaded Inside Hole, Cross Groove

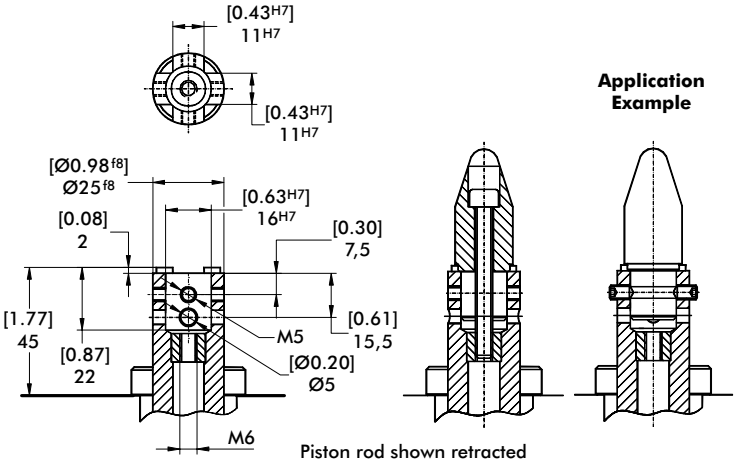

Piston rod shown retracted

04, A4, B4, C4 NAAMS Standard

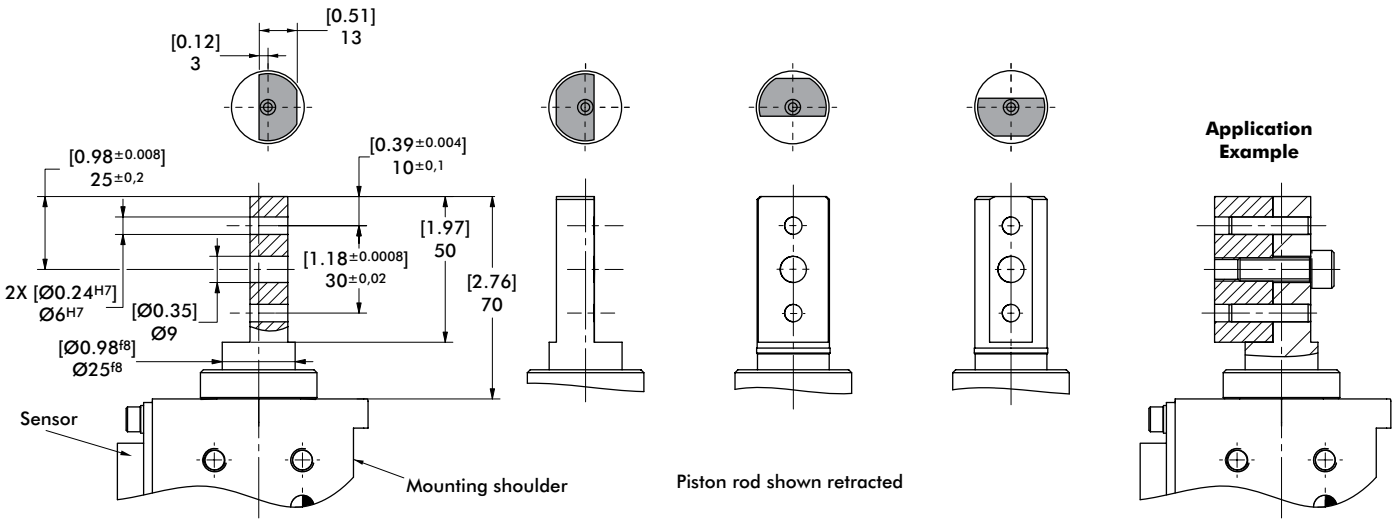

Piston rod shown retracted

04 (0°) **A4** (180°) **B4** (90°) **C4** (270°)

05 Ø10 mm Inside Hole, Cross Groove

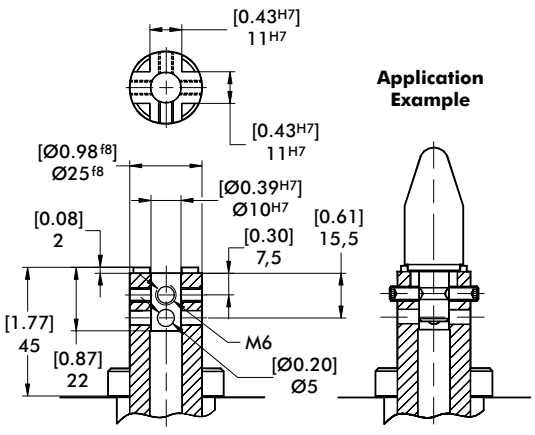

Piston rod shown retracted

07 Ø16 mm Inside Hole, NAAMS

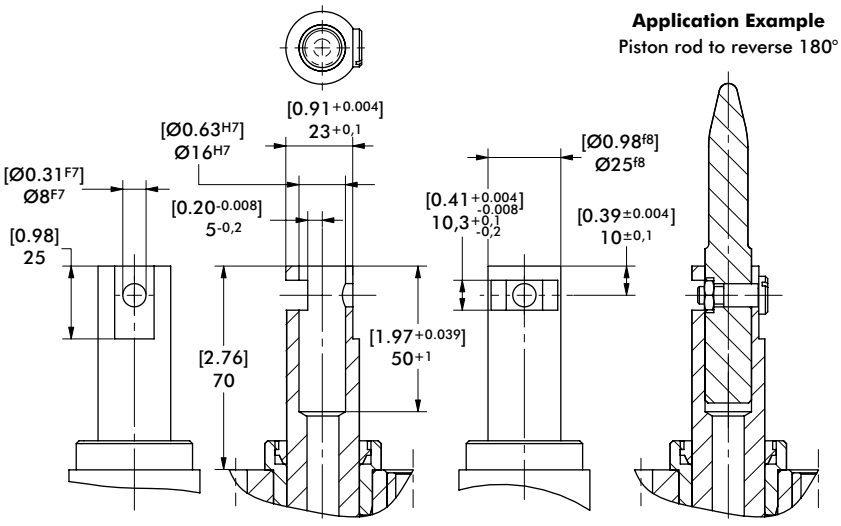

Piston rod shown retracted

Dimensions and technical information are subject to change without notice

86P40/86P60 PISTON RODS

Pneumatic Pin Package | Single Shaft | Dimensions and Technical Specifications

09 Ø20 mm Straight Groove

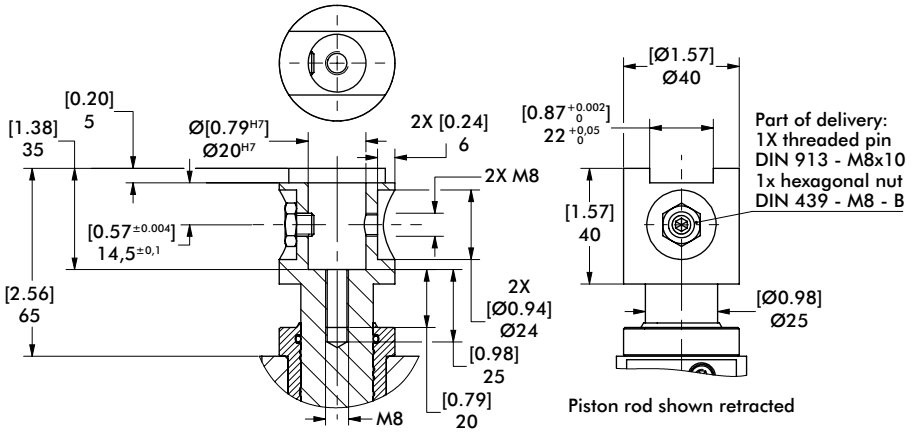

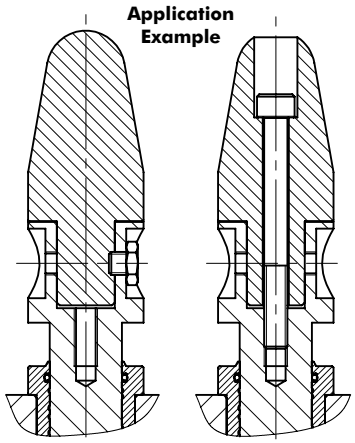

10 Ø12 mm Straight Groove

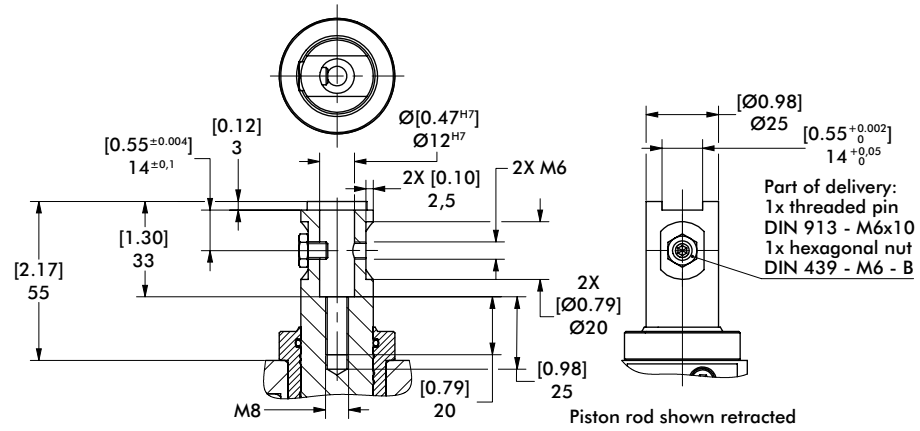

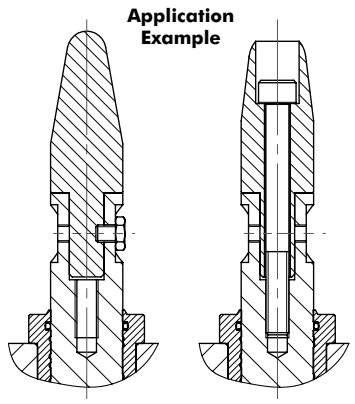

Max Deflection for Centering Pin

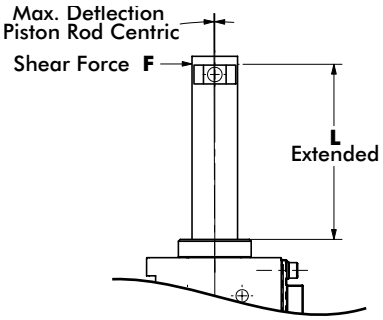

Model no.	Shear force N [lbs]	L mm [in]	Stroke mm [in]	Deflection mm [in]
86P40 / 60-2...B / 2	200 [45]	52 [2.05]	20 [0.79]	0,06 [0.002]
86P40 / 60-2...A / 4		70 [2.76]	40 [1.58]	0,09 [0.004]
86P40 / 60-2...C / 6		90 [3.54]	60 [2.36]	0,12 [0.005]
86P40 / 60-2...F / 8		115 [4.53]	80 [3.15]	0,15 [0.006]

Caution: Generally we recommend using an external guide when the transverse force is more than 200 N [45 lbs]. Also independently of the stroke, less transverse forces, when the overall height L2 > 120 mm [4.7 in] (L2 = extended piston rod plus centering pin).

Example application of an off-center centering pin (Example component shown below is to be made by the customer)

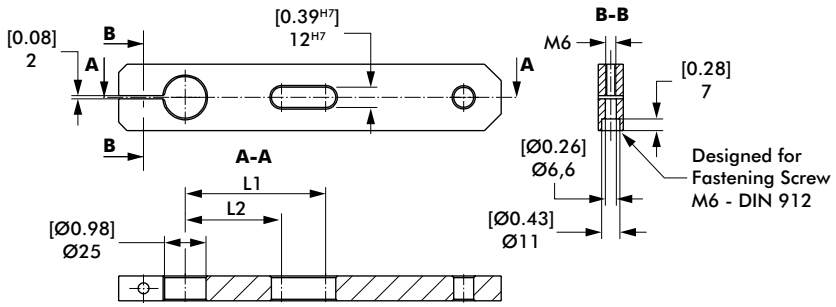

Model no.	L1 mm [in]	L2 mm [in]
86P40 / 60-2...E1	62 [2.44]	58 [2.28]
86P40 / 60-2...E2		
86P40 / 60-2...E4		
86P40 / 60-2...J1*	84,5 [3.33]	80,5 [3.17]

*J1 is not available with 60 or 80 mm strokes.

86P40/86P60 SENSORS

Pneumatic Pin Package | Single Shaft | Dimensions and Technical Specifications

C8 Inductive Sensing System

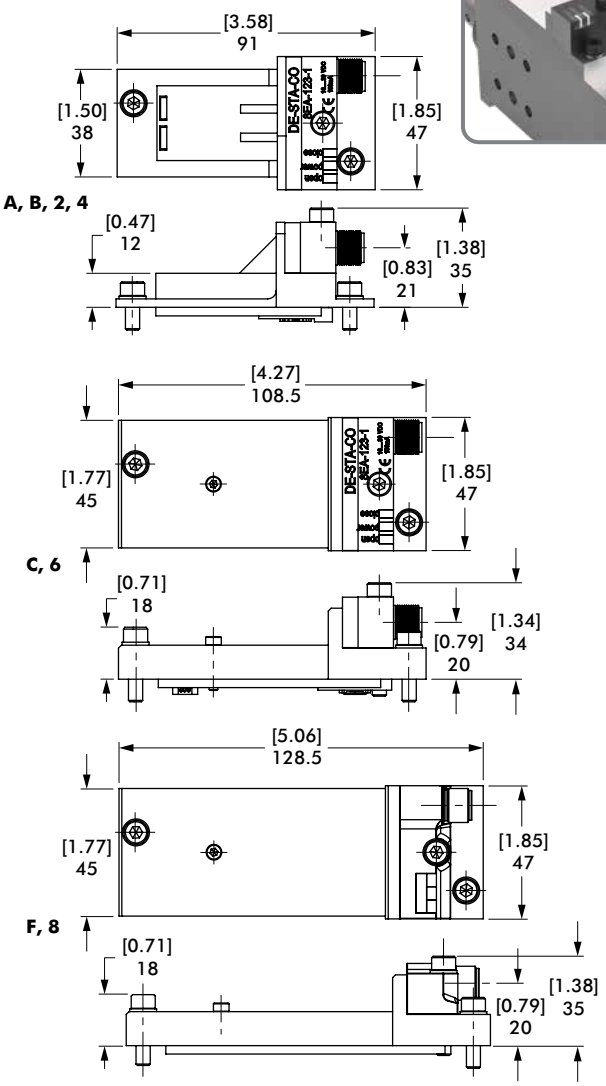

D8 Inductive Sensing System with 90° Swivel Connector

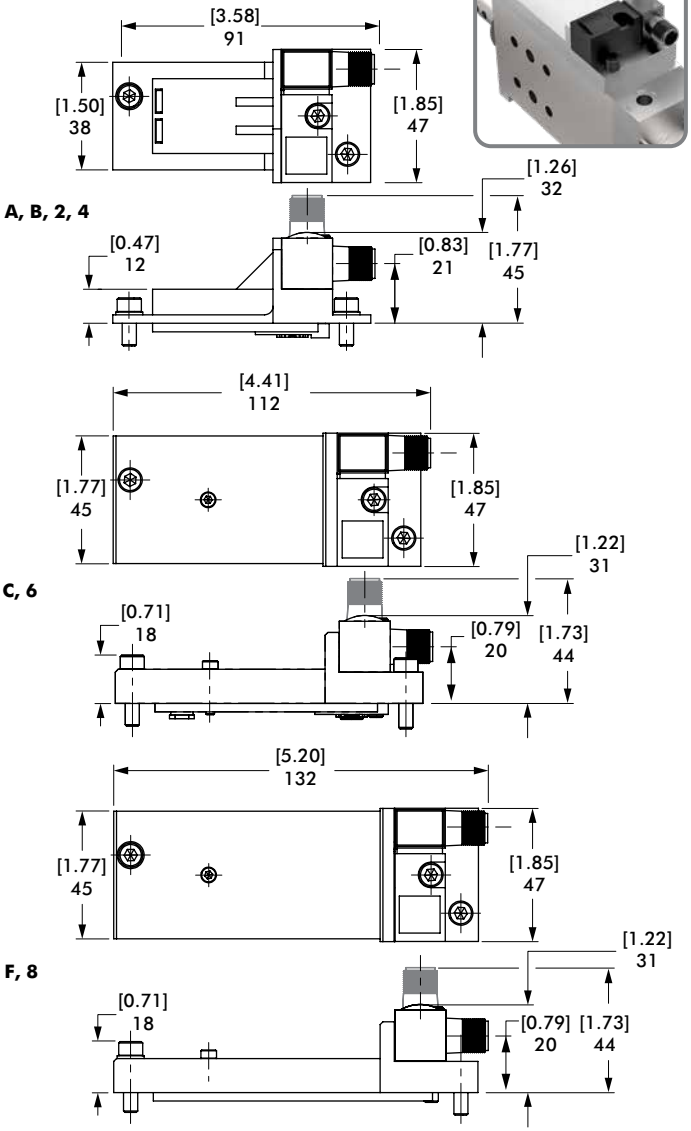

L4, L6, L8 Sensor Cover Plate

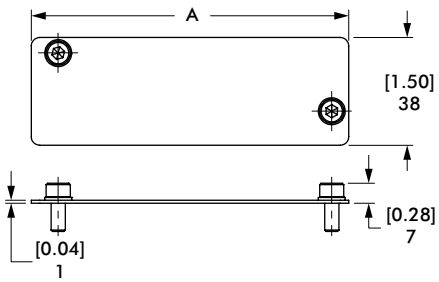

Cover Plate Option	Stroke Option	A mm [in]
L4	A, B, 2, 4	92 [3.62]
L6	C, 6	112 [4.41]
L8	F, 8	132 [5.20]

Inductive Sensor Wiring Diagram for C8, D8

Sensing system immune to interference from AC / DC arc welding.

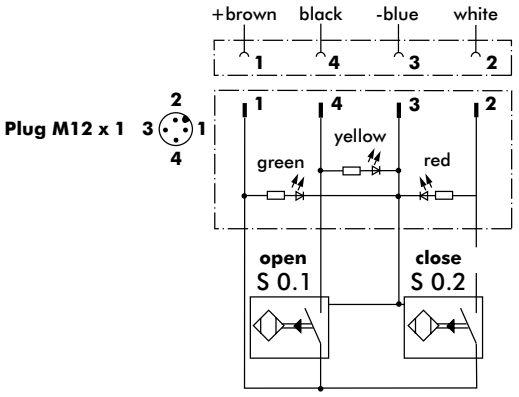

Dimensions and technical information are subject to change without notice

J1, E1, E2, E4 External Guide

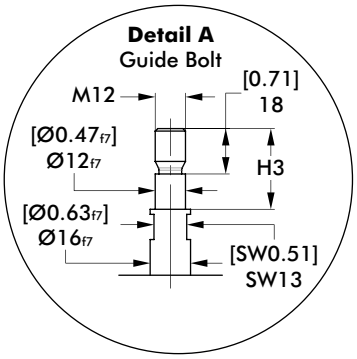

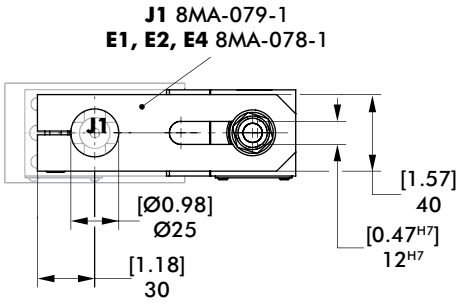

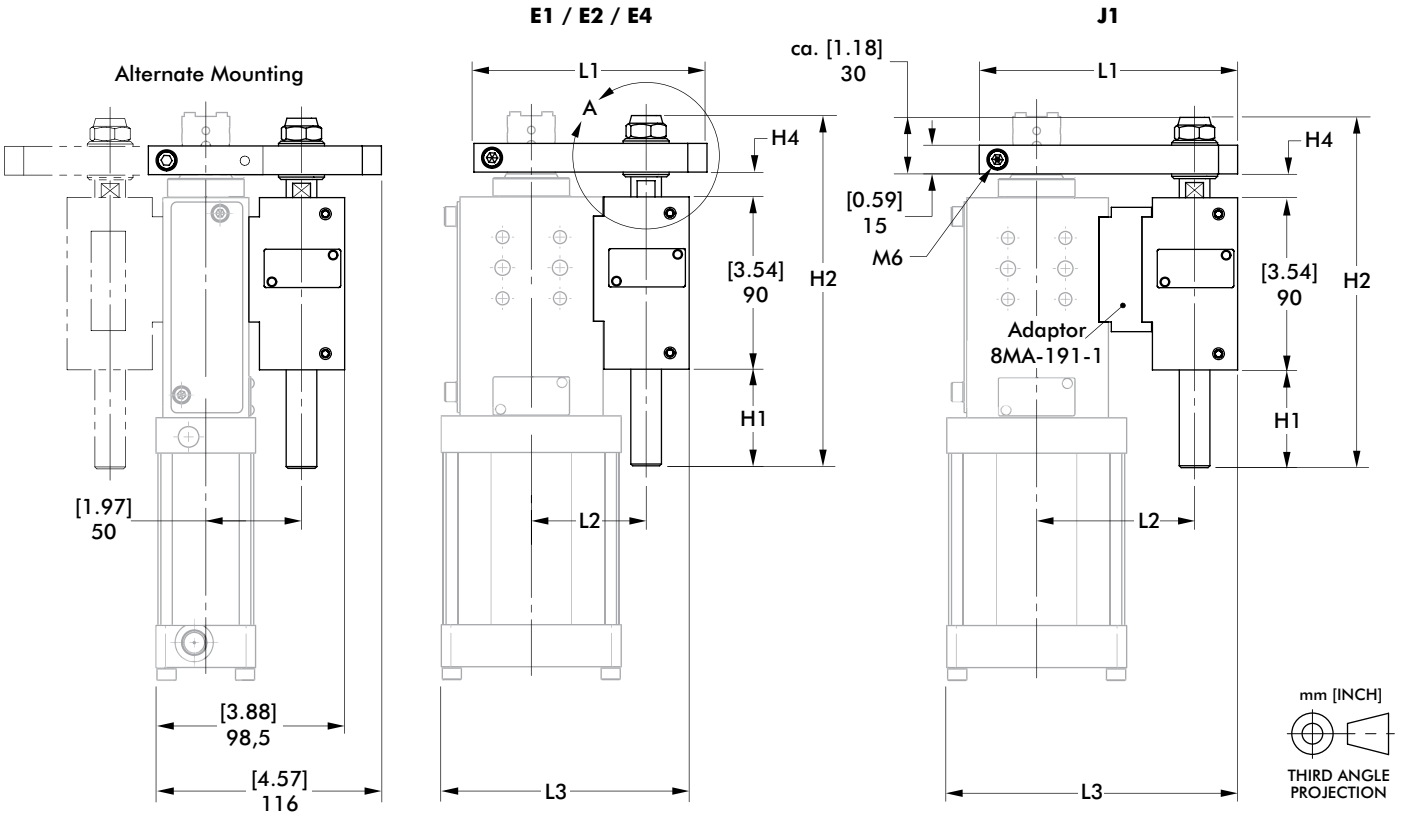

Base Model	External Guide Option	Stroke Option	L1 mm [in]	L2 mm [in]	L3 mm [in]	H1 (max.) mm [in]	H2 mm [in]	H3 mm [in]	H4 (min.) mm [in]
86P40 or 86P60	E1	A, B	120 [4.72]	60 [2.36]	130 [5.12]	47 [1.85]	183 [7.20]	32 [1.26]	16,5 [0.65]
	E1_-K*					55 [2.17]	195 [7.68]	35 [1.38]	17,5 [0.69]
	E2	C				67 [2.64]	203 [7.99]	32 [1.26]	16,5 [0.65]
	E2_-K*					109 [4.29]	250 [9.84]	35 [1.38]	18,5 [0.73]
	E4	F				131 [5.16]	270 [10.63]		16,5 [0.65]
	E4_-K*					133 [5.24]	273 [10.75]		17,5 [0.69]
	J1	A, B	135 [5.31]	82,5 [3.25]	152 [5.98]	47 [1.85]	183 [7.20]	32 [1.26]	16,5 [0.65]
	J1_-K*					55 [2.17]	195 [7.68]	35 [1.38]	17,5 [0.69]

*Ceramic Option

86P40/86P60 OPTIONS

Pneumatic Pin Package | Single Shaft | Dimensions and Technical Specifications

H1 Adaptor

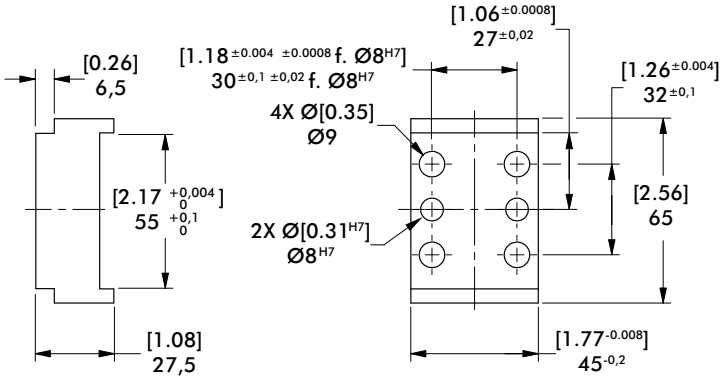

F1 Bellows (Piston Rod Cover)

extended

retracted

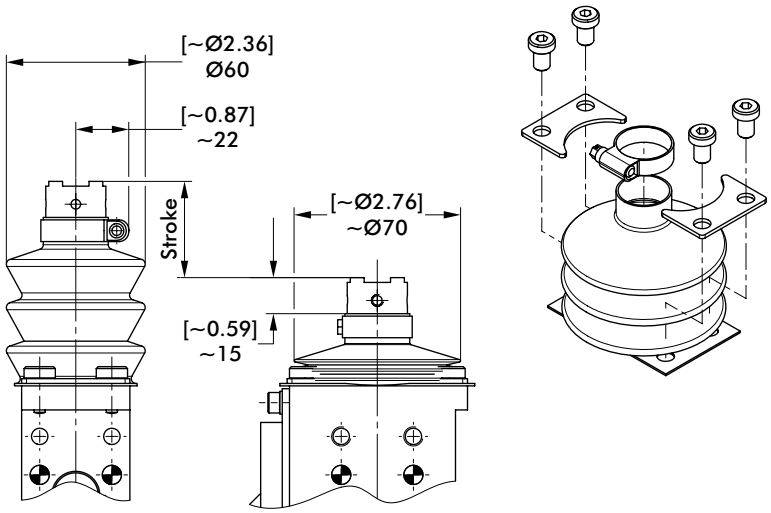

G1 Adaptor + Bellows

(See dimensions above)

Sensor Cable Accessories

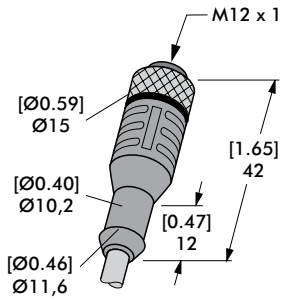

Straight Cable
8EL-002-1

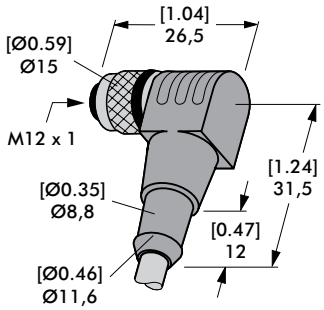

Angular Cable
8EL-003-1

Sensor Cables (1 connector & 5m cable)	Order no.
M12x1 connector, straight, 5-pin	**8EL-002-1**
M12x1 connector, 90° angular, 4-pin	**8EL-003-1**

Deflection with External Guide **E1, E2, E4, J1**

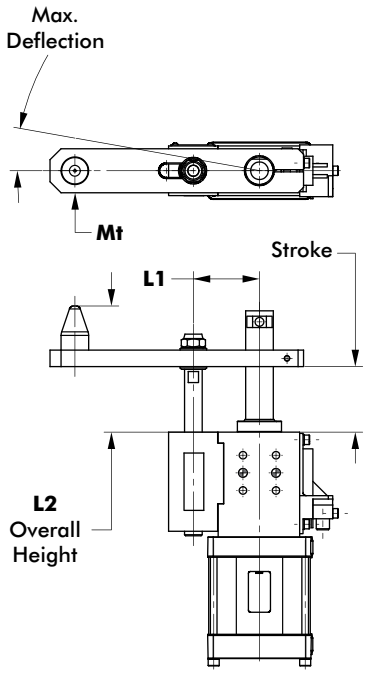

L1 = 60mm without Adapter
L1 = 82,5mm with Adapter

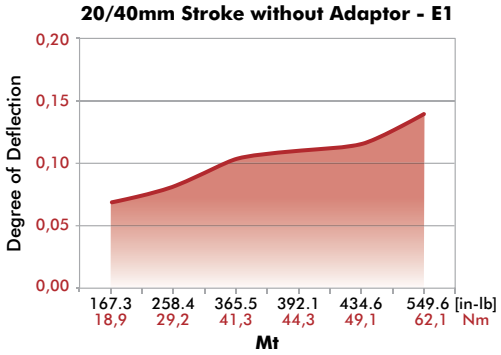

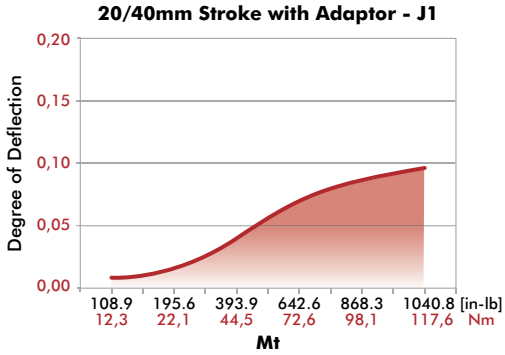

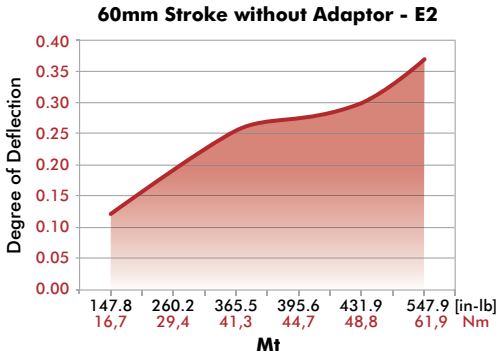

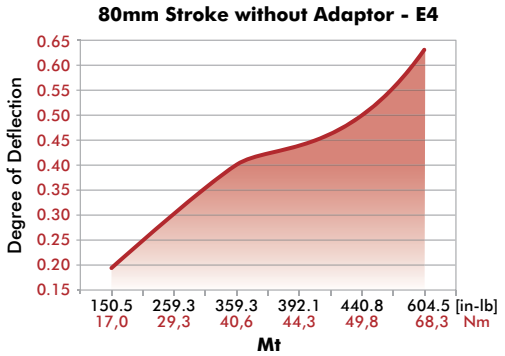

Deflection without External Guide

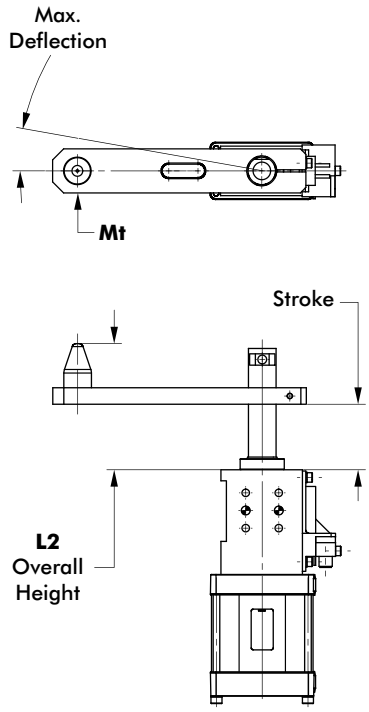

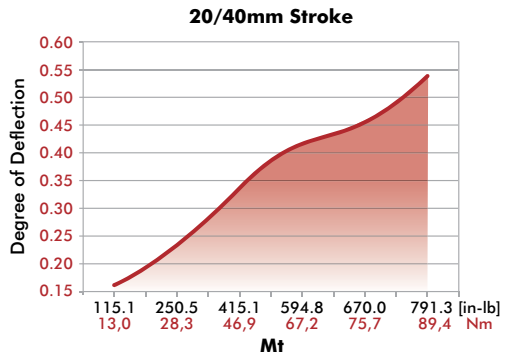

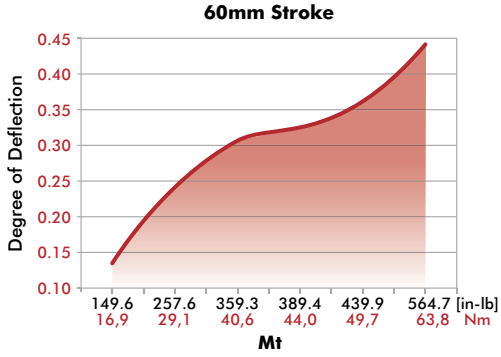

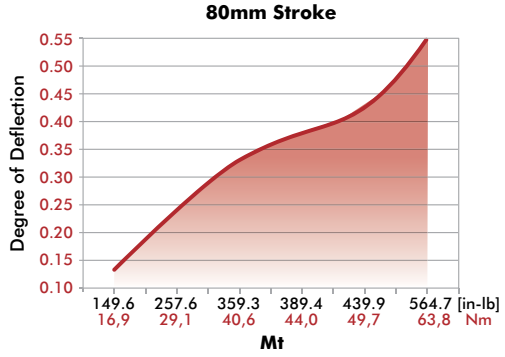

Caution: Generally we recommend using an external guide when the transverse force is more than 200 N [45 lbs]. Also independently of the stroke, less transverse forces, when the overall height L2 > 120 mm [4.7 in] (L2 = extended piston rod plus centering pin).

56H40-2

Manual Pin Package | Single Shaft | Ordering Information

56H40-2 | **02** | **C8** | **E1** | **A** | **-K**

Ceramic Option for Piston Rod
K

Piston Rod	Description
01	Ø16 mm Inside Hole (Standard)
02	Ø16 mm M6 Threaded Inside Hole, Cross Groove
04	NAAMS Standard
A4	NAAMS Standard Rotated 180°
B4	NAAMS Standard Rotated 90°
C4	NAAMS Standard Rotated 270°
05	Ø10 mm Inside Hole, Cross Groove
07	Ø16 mm Inside Hole, NAAMS
09	Ø20 mm Straight Groove
10	Ø12 mm Straight Groove

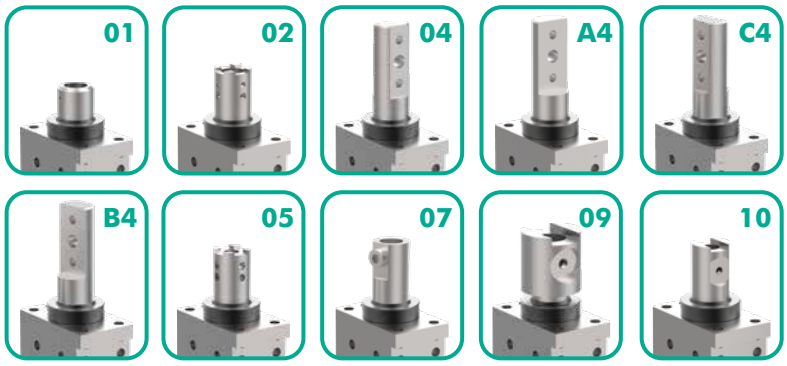

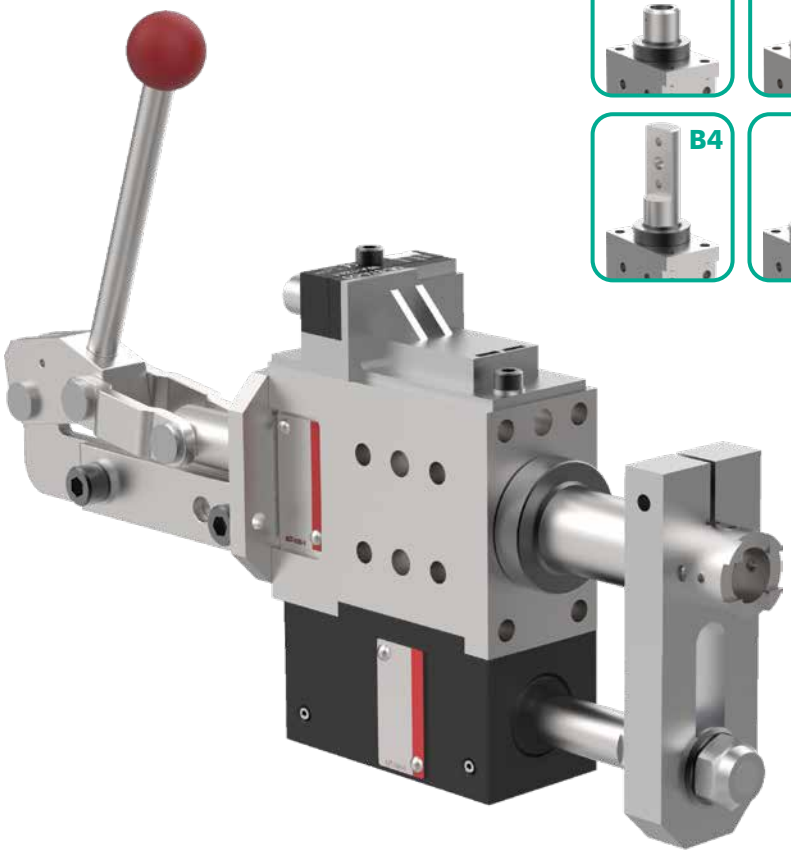

Dimensions and technical information are subject to change without notice

Accessories	Description
00	No Accessories
E1	External Guide for **A, B** (82ZB-009-2, Ceramic 82ZB-181-1)
E2	External Guide for **C** (82ZB-090-1, Ceramic 82ZB-105-1)
F1	Bellows for piston rods **02, 05, 07, 10** in strokes **A, B, 2, 4** (82ZB-013-3)

Sensor	Description
L4	Cover Plate for **A, B, 2, 4** (86P0-200L4)
L6	Cover Plate for **C, 6** (86P0-200L6)
C8	Inductive Sensing System with M12x1 Connector for **A, B, 2, 4** (86P0-200C8), for **C, 6** (86P0-200C8006)
D8	Inductive Sensing System with 90° M12x1 Swivel Connector for **A, B, 2, 4** (86P0-200D8), for **C, 6** (86P0-200D8006)

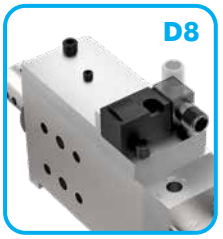

Sensor Cables Order separately

Order No.	Description
8EL-002-1	M12x1, Straight, 5-pin Connector with 5 m [16 ft.] Cable
8EL-003-1	M12x1, Angular, 4-pin Connector with 5 m [16 ft.] Cable

Stroke	Description
	Anti-Twist Device/Low Accuracy
B	20 mm Stroke (8MF-071-1)
A	40 mm Stroke (8CE-231-1)
C	60 mm Stroke (8CE-231-1)
	Anti-Twist Device
2	20 mm Stroke (86P0-20000002)
4	40 mm Stroke (86P0-20000004)
6	60 mm Stroke (86P0-20000006)

56H40-2

Manual Pin Package | Single Shaft | Dimensions and Technical Specifications

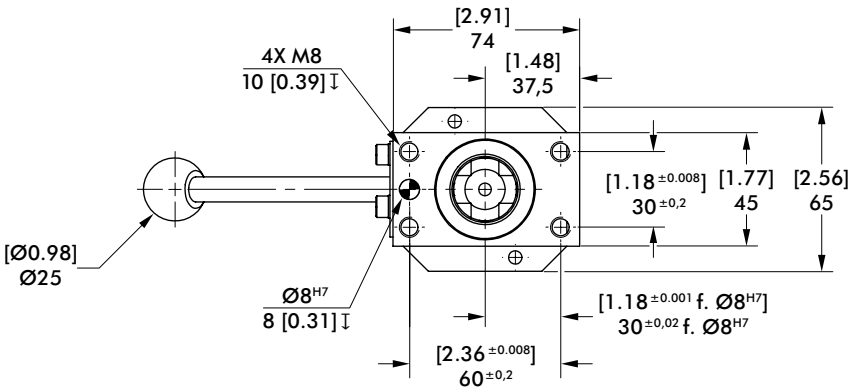

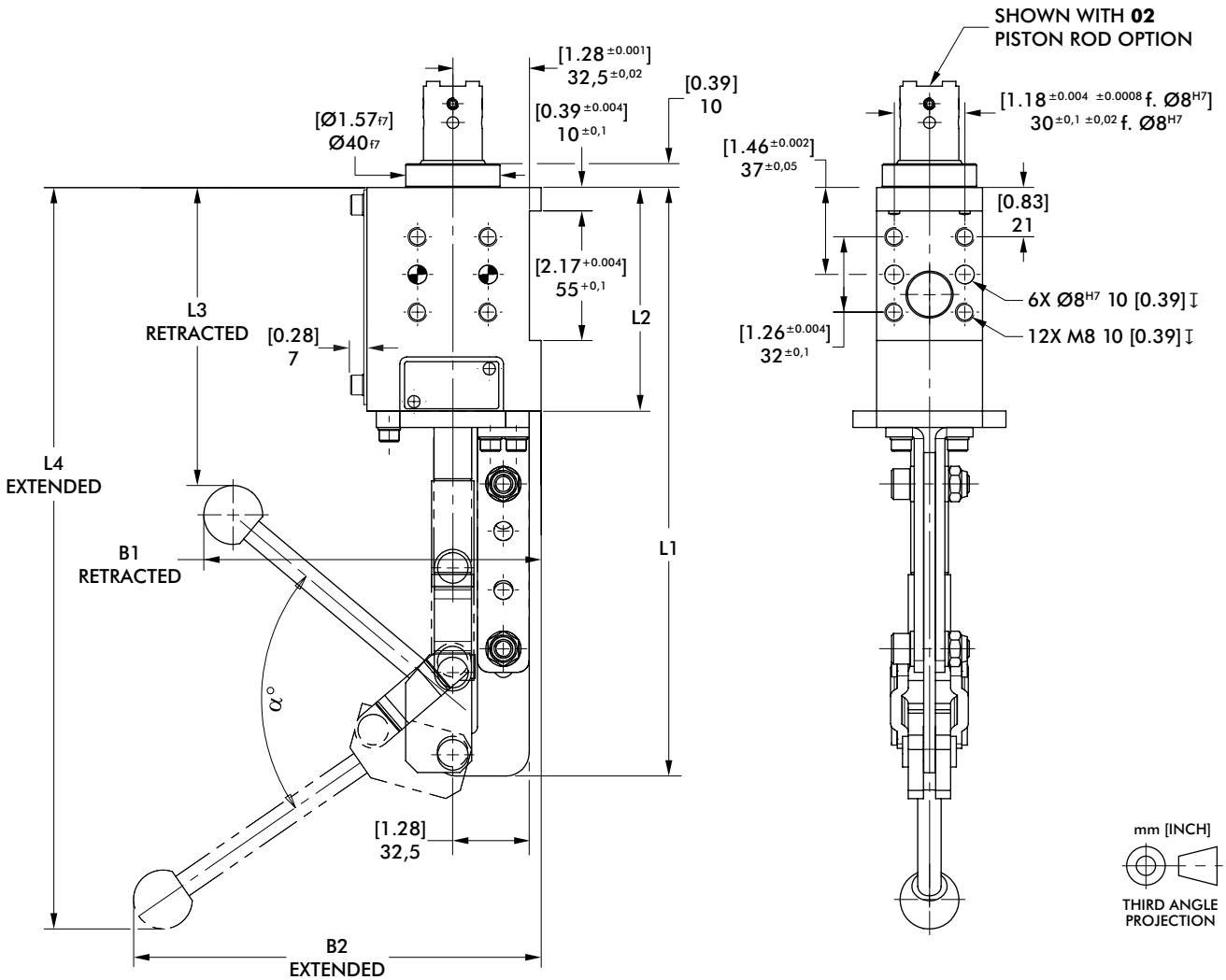

Base Model	Stroke Option	Stroke +2 mm [in]	B1 (retracted) mm [in]	B2 (extended) mm [in]	L1 (max.) mm [in]	L2 mm [in]	L3 (retracted) mm [in]	L4 (extended) mm [in]	Opening Angle α	Weight Kg [lbs]
56H40-2	B, 2	20 [0.79]	144 [5.67]	188 [7.40]	270 [10.63]	95 [3.74]	277 [10.91]	146 [5.75]	50°	2,0 [4.41]
	A, 4	40 [1.57]		173 [6.81]	250 [9.84]		315 [12.40]	126 [4.96]	75°	
	C, 6	60 [2.36]		116 [4.57]	270 [10.63]	115 [4.53]	394 [15.51]	146 [5.75]	109°	2,5 [5.51]

Dimensions and technical information are subject to change without notice

56H40-2 PISTON RODS

Manual Pin Package | Single Shaft | Dimensions and Technical Specifications

01 Ø16 mm Inside Hole

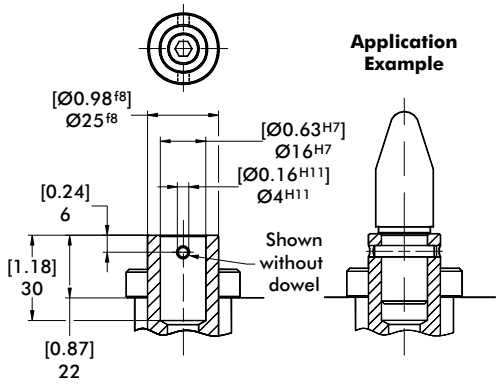

Piston rod shown retracted

02 Ø16 mm M6 Threaded Inside Hole, Cross Groove

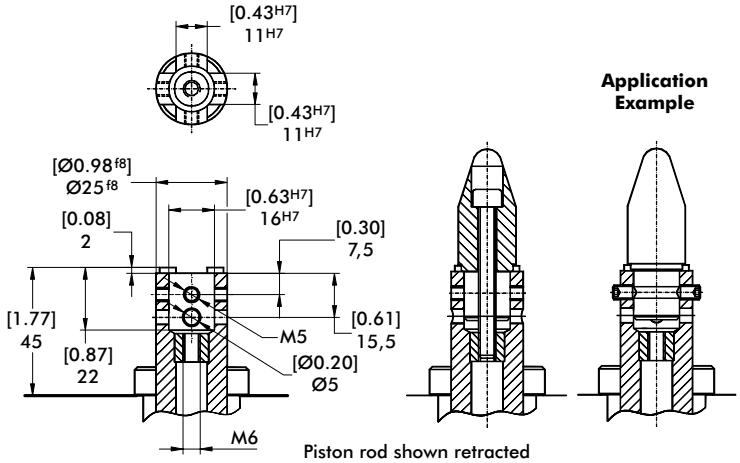

Piston rod shown retracted

04, A4, B4, C4 NAAMS Standard

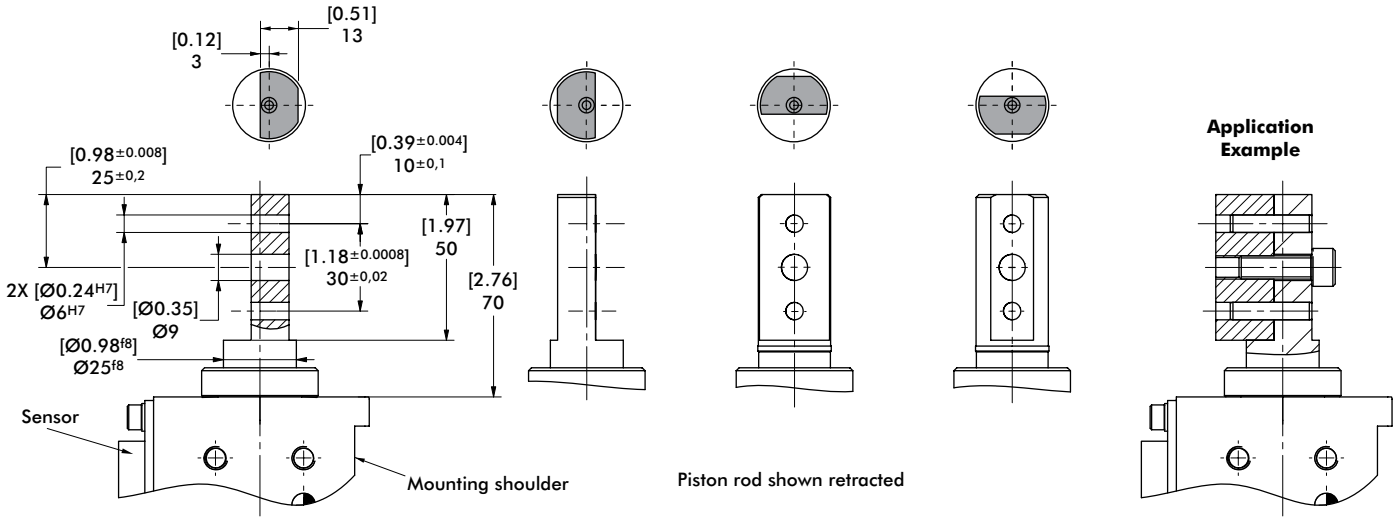

Piston rod shown retracted

04 (0°) **A4** (180°) **B4** (90°) **C4** (270°)

05 Ø10 mm Inside Hole, Cross Groove

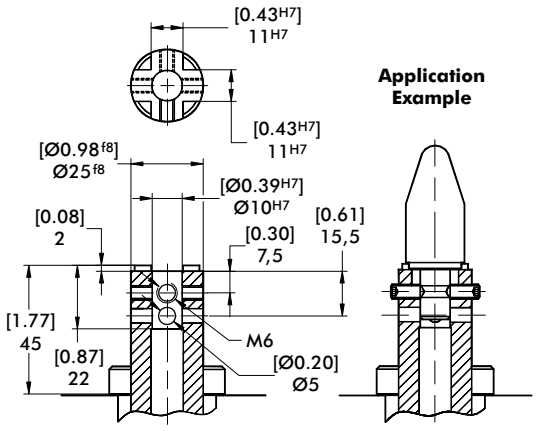

Piston rod shown retracted

07 Ø16 mm Inside Hole, NAAMS

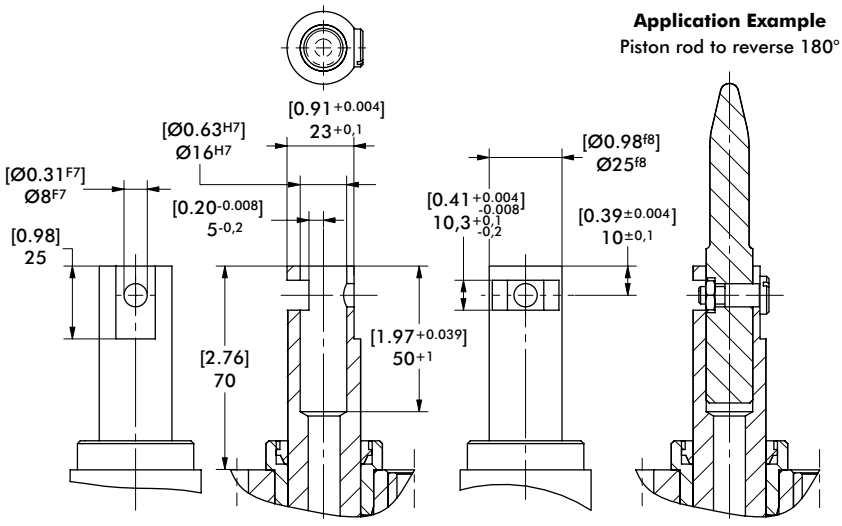

Piston rod shown retracted

56H40-2 PISTON RODS

Manual Pin Package | Single Shaft | Dimensions and Technical Specifications

09 Ø20 mm Straight Groove

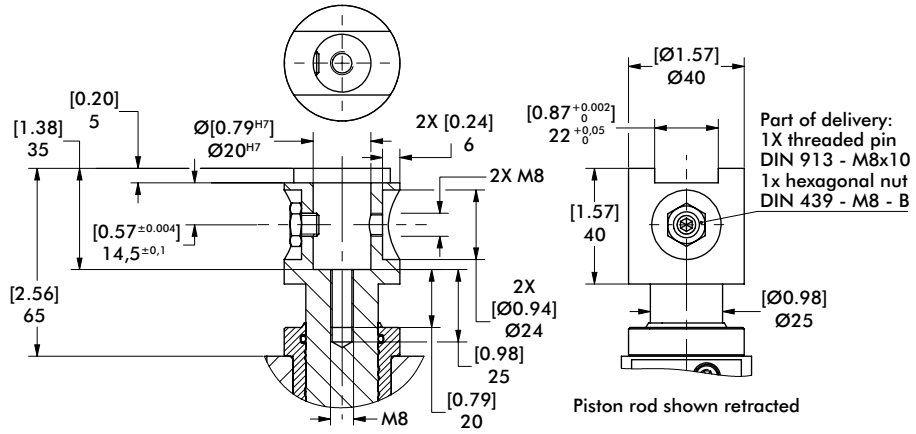

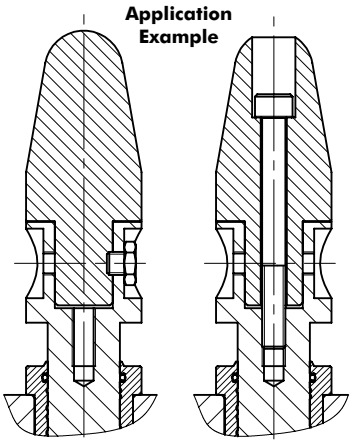

10 Ø12 mm Straight Groove

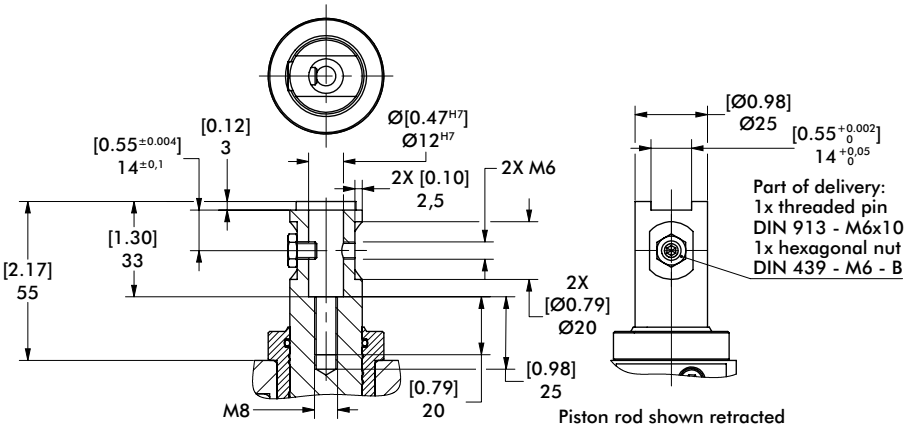

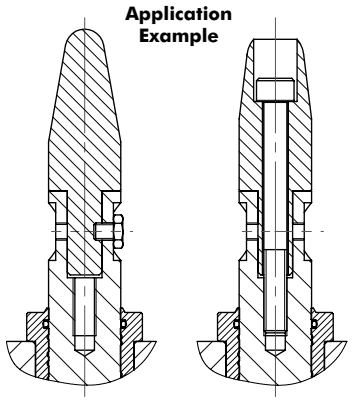

Max Deflection for Centering Pin

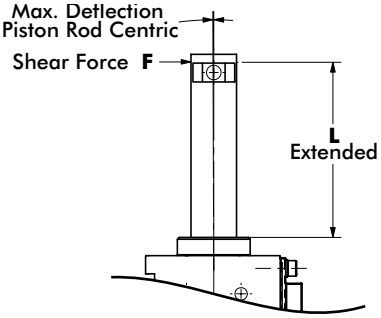

Model no.	Shear force N [lbs]	L mm [in]	Stroke mm [in]	Deflection mm [in]
56H40-2...B / 2	200 [45]	52 [2.05]	20 [0.79]	0,06 [0.002]
56H40-2...A / 4		70 [2.76]	40 [1.58]	0,09 [0.004]
56H40-2...C / 6		90 [3.54]	60 [2.36]	0,12 [0.005]

Caution: Generally we recommend using an external guide when the transverse force is more than 200 N [45 lbs]. Also independently of the stroke, less transverse forces, when the overall height L2 > 120 mm [4.7 in] (L2 = extended piston rod plus centering pin).

Example application of an off-center centering pin (Example component shown below is to be made by the customer)

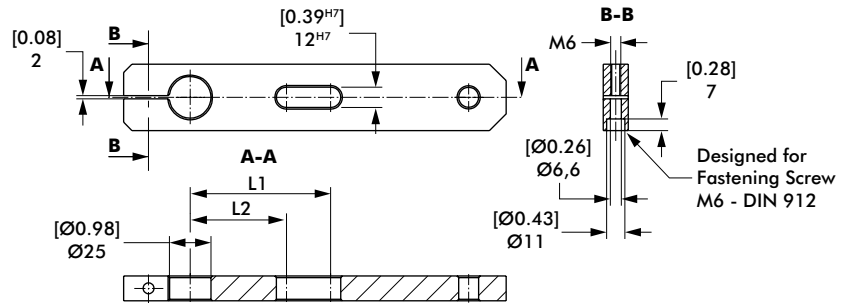

Model no.	L1 mm [in]	L2 mm [in]
56H40-2...E1	62 [2.44]	58 [2.28]
56H40-2...E2		

*J1 is not available with 60 or 80 mm strokes.

Dimensions and technical information are subject to change without notice

C8 Inductive Sensing System

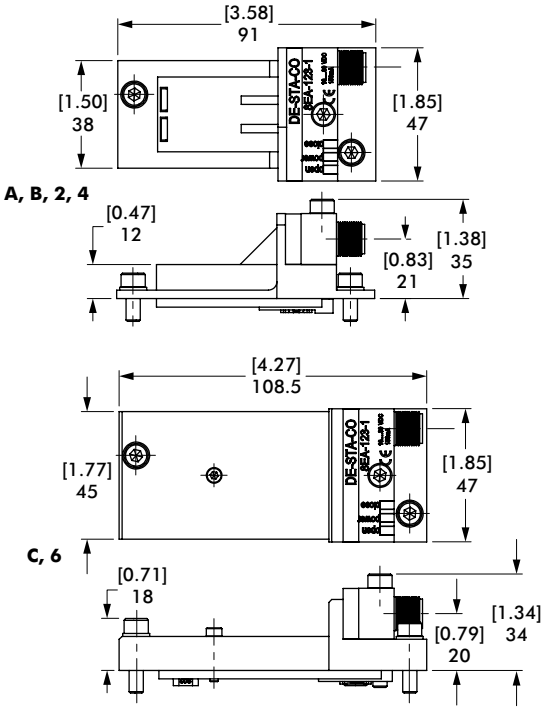

D8 Inductive Sensing System with 90° Swivel Connector

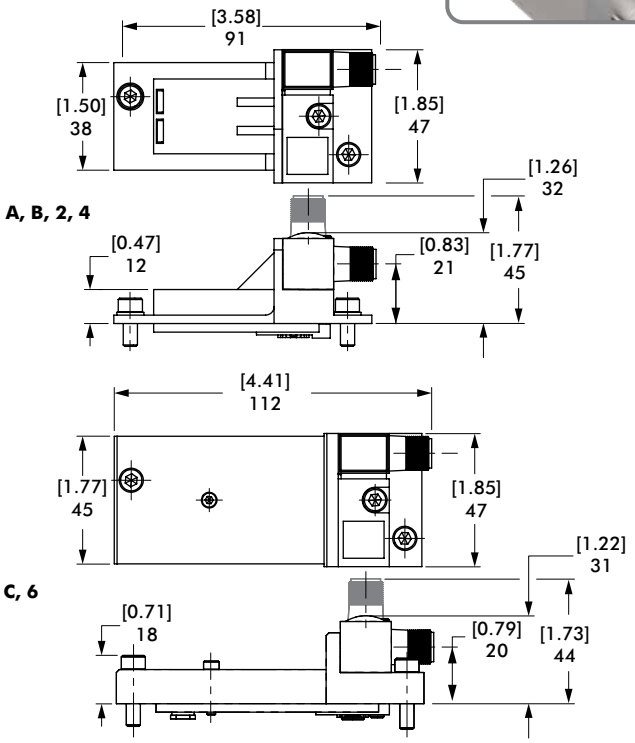

L4, L6 Sensor Cover Plate

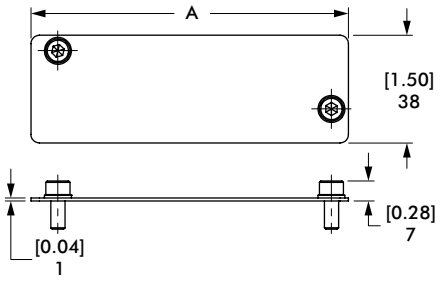

Cover Plate Option	Stroke Option	A mm [in]
L4	A, B, 2, 4	92 [3.62]
L6	C, 6	112 [4.41]

Inductive Sensor Wiring Diagram for C8, D8

Sensing system immune to interference from AC / DC arc welding.

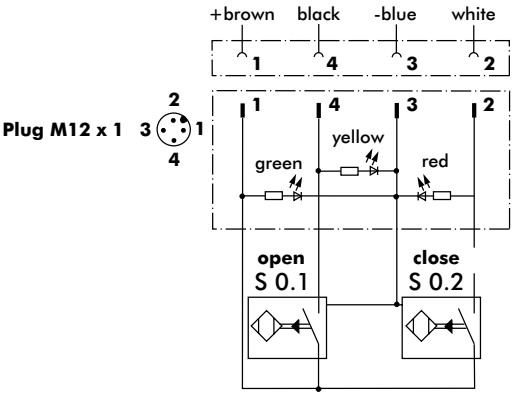

56H40-2 OPTIONS

Manual Pin Package | Single Shaft | Dimensions and Technical Specifications

E1, E2 External Guide

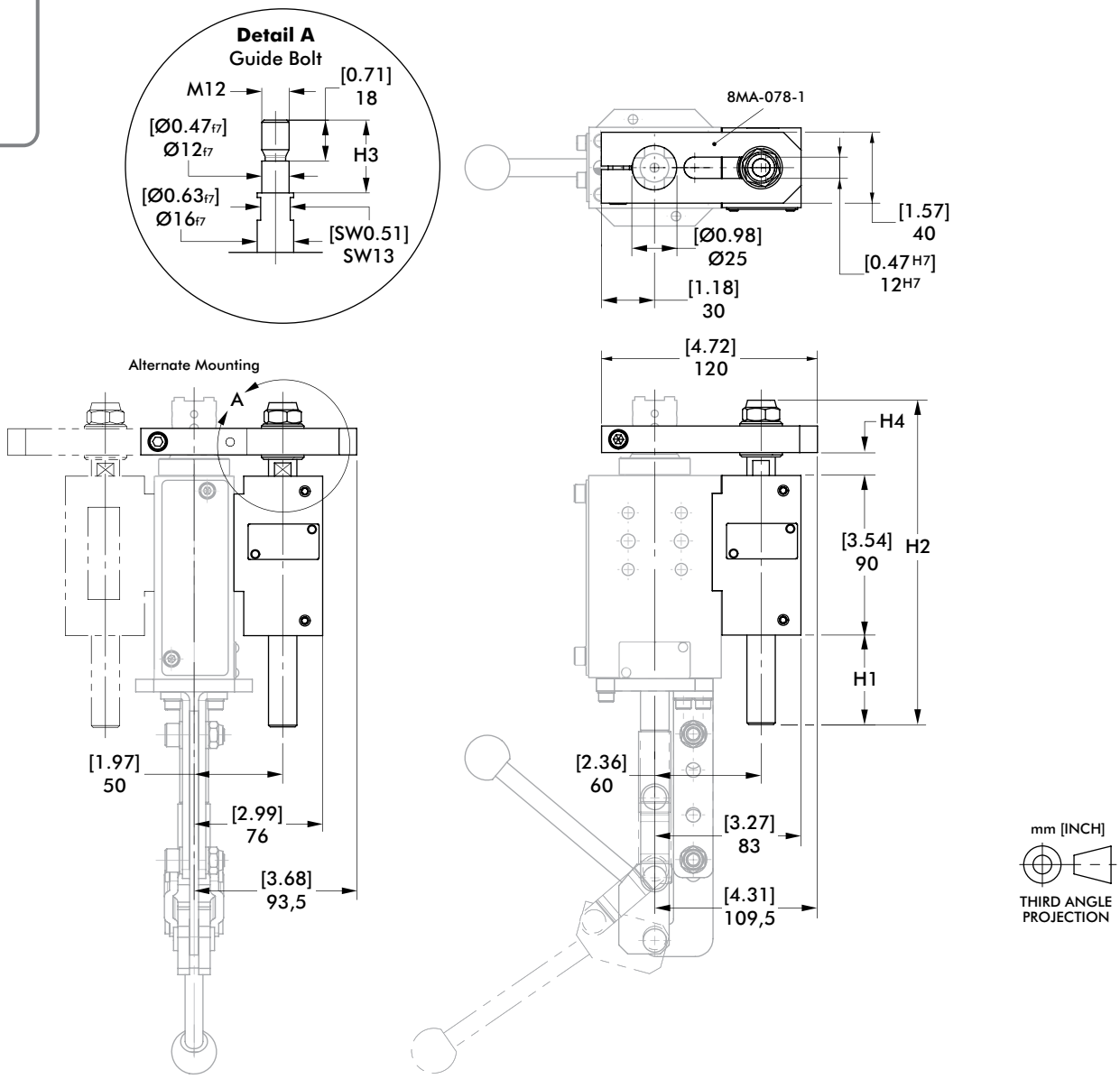

mm [INCH]

THIRD ANGLE PROJECTION

Base Model	External Guide Option	Stroke Option	H1 (max.) mm [in]	H2 mm [in]	H3 mm [in]	H4 (min.) mm [in]
56H40-2	E1	A, B	47 [1.85]	183 [7.20]	32 [1.26]	16,5 [0.65]
	E1_-K*		55 [2.17]	195 [7.68]	35 [1.38]	17,5 [0.69]
	E2	C	67 [2.64]	203 [7.99]	32 [1.26]	16,5 [0.65]
	E2_-K*		109 [4.29]	250 [9.84]	35 [1.38]	18,5 [0.73]

*Ceramic Option

56H40-2 OPTIONS

Manual Pin Package | Single Shaft | Dimensions and Technical Specifications

F1 Bellows (Piston Rod Cover)

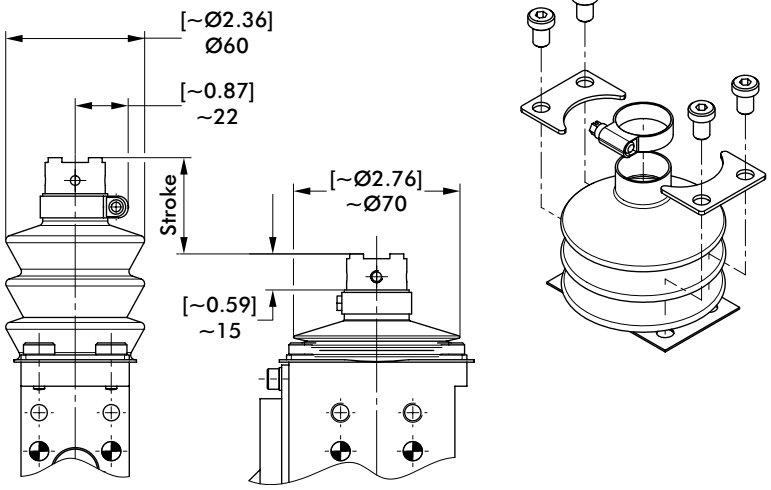

extended retracted

Sensor Cable Accessories

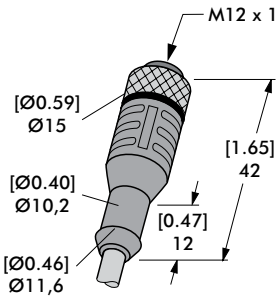

Straight Cable
8EL-002-1

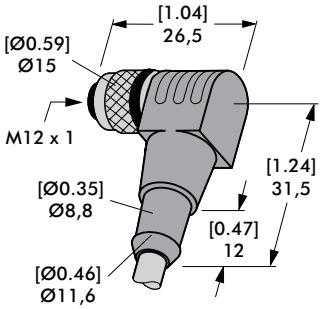

Angular Cable
8EL-003-1

Sensor Cables (1 connector & 5m cable)	Order no.
M12x1 connector, straight, 5-pin	**8EL-002-1**
M12x1 connector, 90° angular, 4-pin	**8EL-003-1**

56H40-2

Manual Pin Package | Single Shaft | Technical Specifications

Deflection with External Guide **E1, E2**

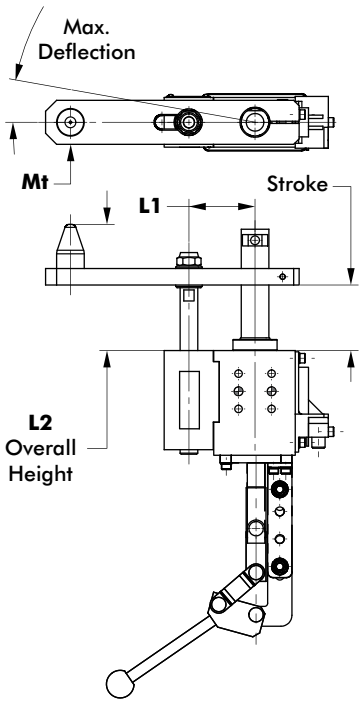

L1 = 60mm without Adapter
L1 = 82,5mm with Adapter

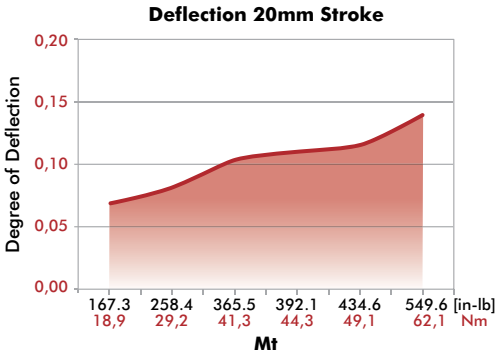

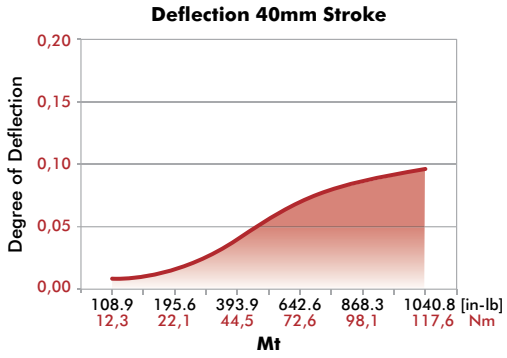

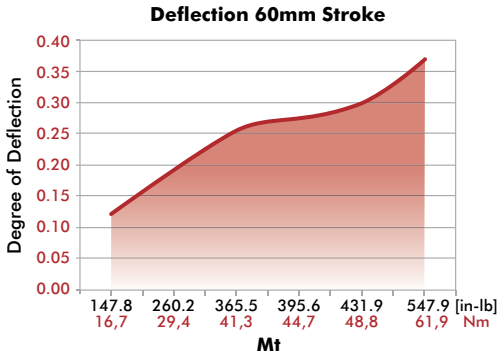

Deflection without External Guide

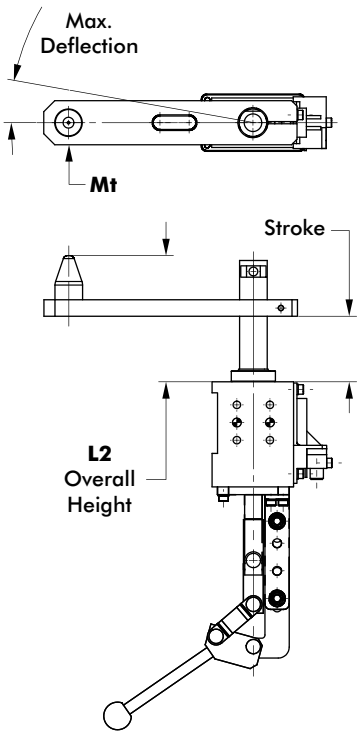

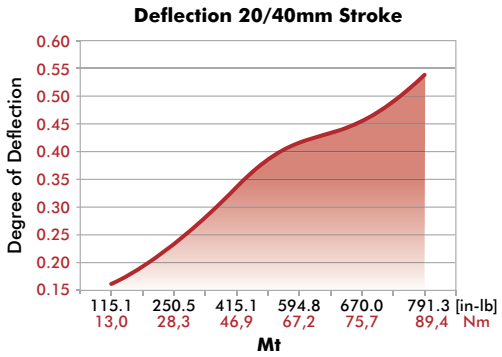

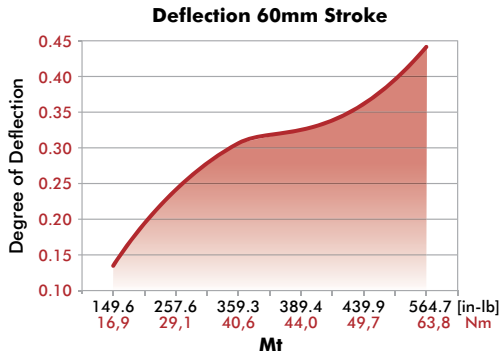

Caution: Generally we recommend using an external guide when the transverse force is more than 200 N [45 lbs]. Also independently of the stroke, less transverse forces, when the overall height L2 > 120 mm [4.7 in] (L2 = extended piston rod plus centering pin).

Notes

85P5-1

Pneumatic Pin Package | Single Shaft | Ordering Information

85P5-1 | **04** | **B8** | **E1** | **H** | **0** | **-K**

Plunger	Description
K	Ceramic Coated Plunger

Stroke	Description
0	without Stroke Limiter

Piston Rod	Description
02	Ø16 mm M6 Threaded Inside Hole, Cross Groove
04	NAAMS Standard
A4	NAAMS Standard Rotated 180°
05	Ø10 mm Inside Hole, Cross Groove

Accessories	Description
00	No Accessories
E1*	External Guide (82ZB-010-2)

*External Guide can be mounted to front or sides of unit by customer.

Hand Lever	Description
0	No Hand Lever
H	Hand Lever

*Hand Lever can be attached on either side of unit.

Sensor	Description
00	Without Sensing System
B8	Inductive Sensing System with M12x1 Cable Connector (8EA-033-2)

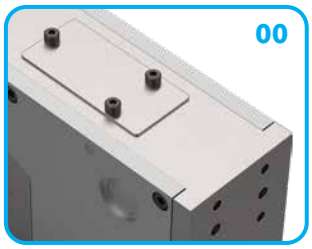

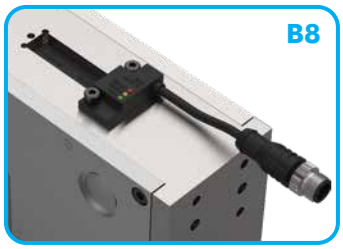

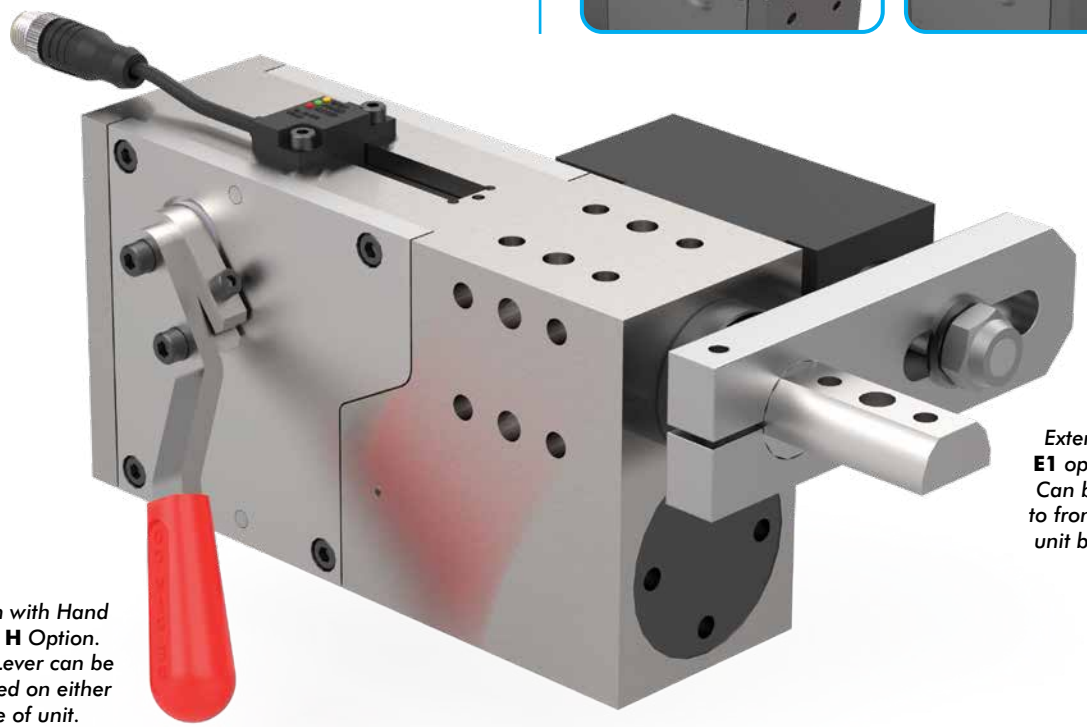

*Shown with Hand Lever **H** Option. Hand Lever can be attached on either side of unit.*

*External Guide **E1** option shown. Can be mounted to front or sides of unit by customer.*

Dimensions and technical information are subject to change without notice

Pneumatic Pin Package | Single Shaft | Dimensions and Technical Specifications

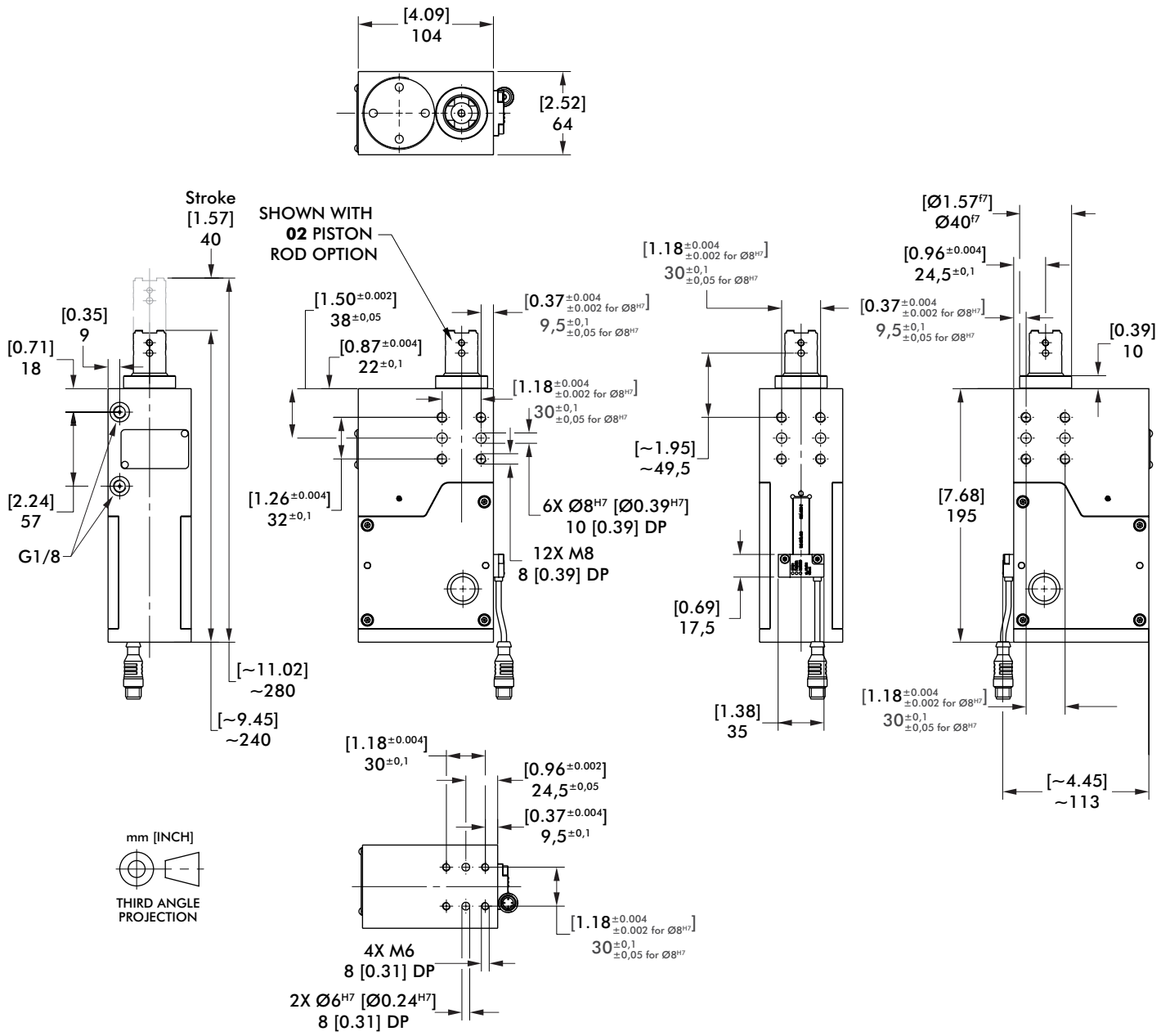

Medium: Operation with oil free air is permissible

Note: Extracting force and retracting force shown in this chart are only available with the last 2 mm stroke at extracted position. In the other range of the stroke the forces will be approximately 30% of value in the chart.

Base Model	Stroke mm [in]	Pushing Force at 6 bar N [lbf]	Retraction Force at 6 bar N [lbf]	Holding Force at 6 bar N [lbf]	Max. Operating Pressure bar [psi]	Piston Ø mm [in]	Weight Kg [lbs]	Air consumption per double stroke at 5 bar dm^3 [ft^3]
85P5-1	40 [1.57]	2000 [449]	1000 [225]	5000 [1124]	6 [87]	50 [1.97]	3,8 [8.36]	1,1 [0.04]

85P5-1 PISTON RODS

Pneumatic Pin Package | Single Shaft | Dimensions and Technical Specifications

02 Ø16 mm M6 Threaded Inside Hole, Cross Groove

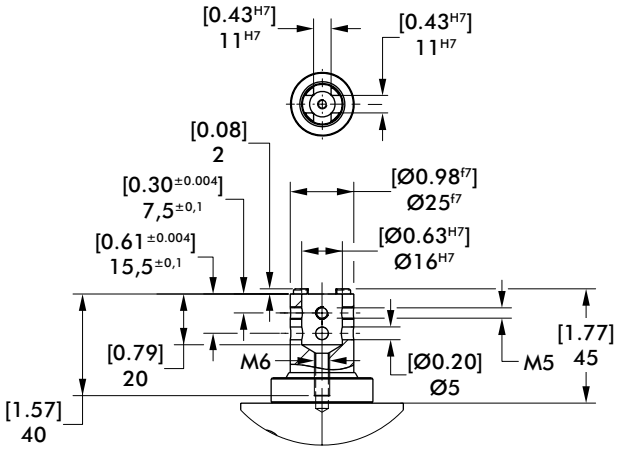

02

04, A4, NAAMS Standard

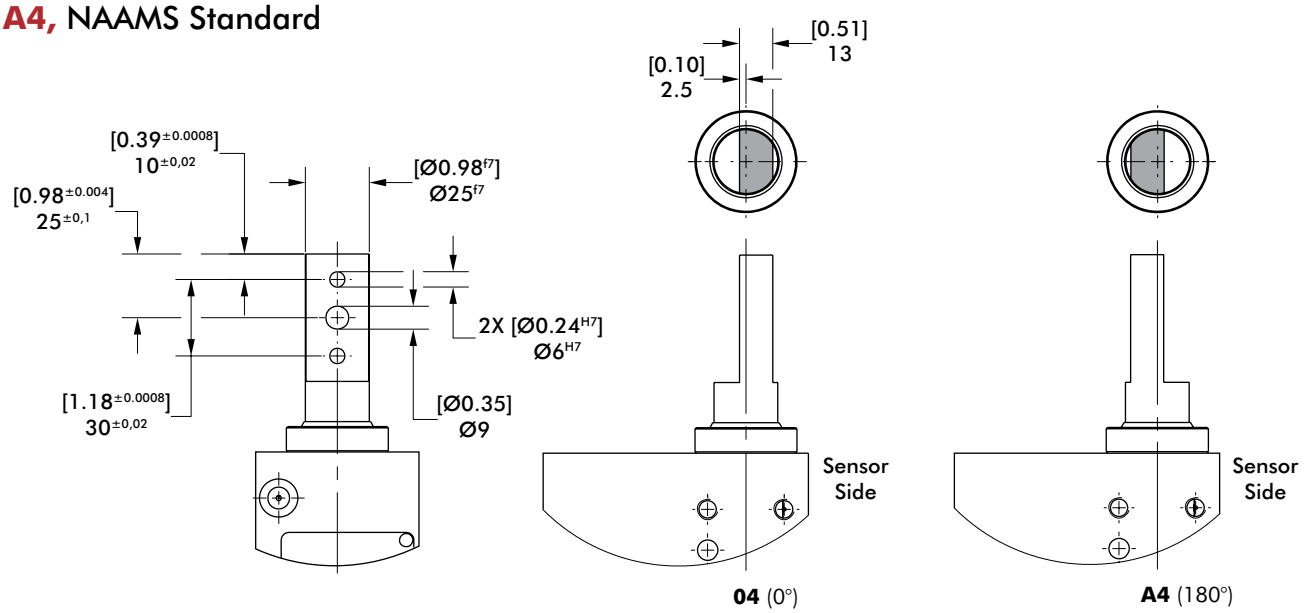

04 (0°) **A4** (180°)

07 Ø16 mm Inside Hole, NAAMS

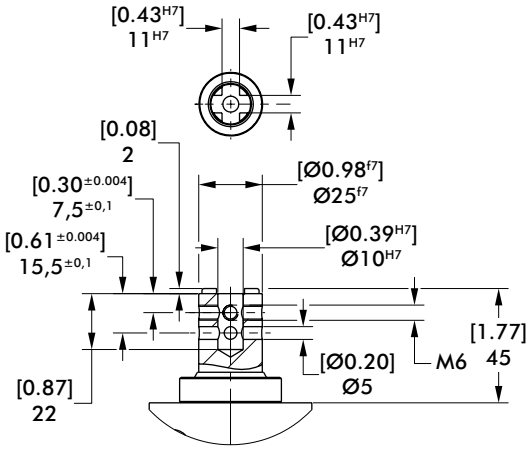

07

Dimensions and technical information are subject to change without notice

E1 External Guide

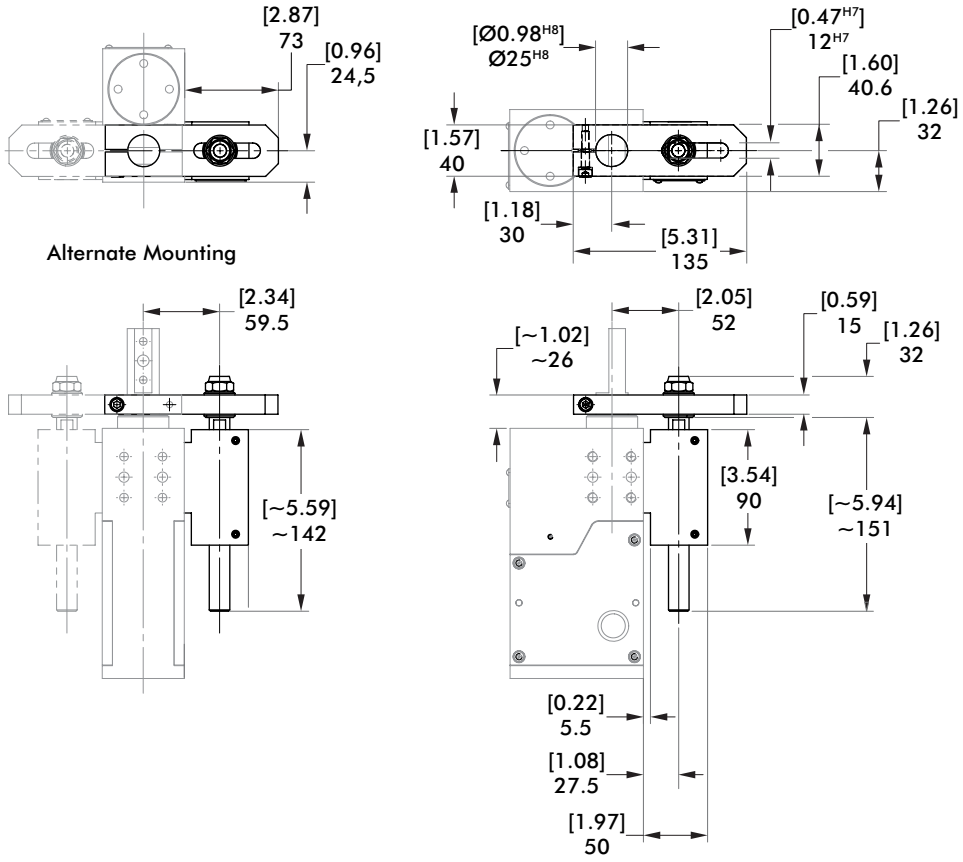

H Hand Lever

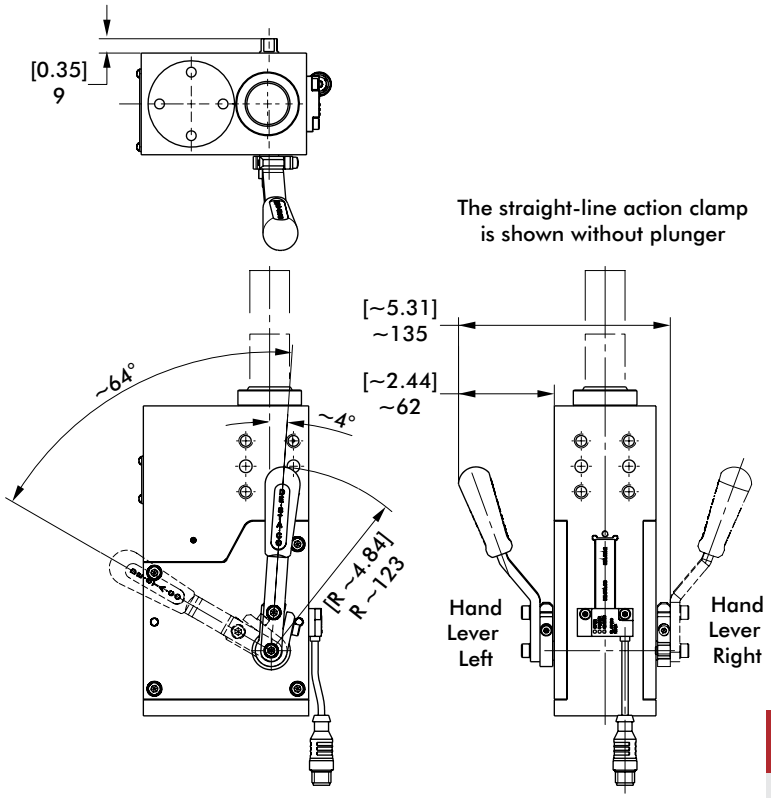

Model no.	Weight kg [lb]
85P5-1****00H0	4 [8.82]

85P5-1

Pneumatic Pin Package | Single Shaft | Dimensions and Technical Specifications

Inductive Sensor Wiring Diagram

Sensing system immune to interference from A.C./D.C. arc welding.

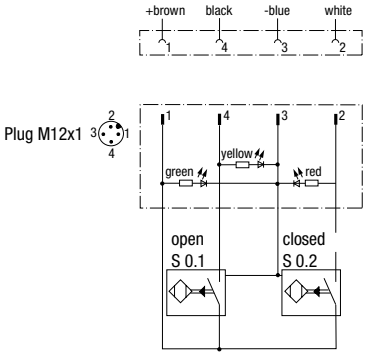

Sensor Accessories and Spare Parts

Description	Order no.
Sensor Cables (1 connector & 5 m cable)	
M12x1 connector, straight, 5-pin	**8EL-002-1**
M12x1 connector, 90° angular, 4-pin	**8EL-003-1**
Spare Parts	**Order no.**
Cylinder	**8PW-105-1**
Cylinder Seal Kit	**8PW-105-1-00**

Straight Cable

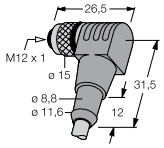

Angular Cable

Dimensions and technical information are subject to change without notice

Notes

85D5-2

Pneumatic Pin Package | Dual Shaft | Ordering Information

85D5-2 | **C4** | **L8** | **10** | **H0** | **4**

Stroke	Description
4	40 mm Stroke

Piston Rod	Description
C4	NAAMS Standard
D4	NAAMS Standard Rotated 180°

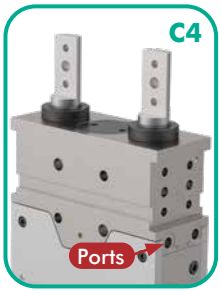

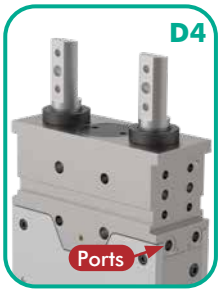

Hand Lever	Description
00	No Hand Lever
H0	Standard Hand Lever
HS	Weldable Hand Lever

Hand Lever Shafts*	Description
10	Non-port side
20	Port side

*Hand Lever can be attached on either side of unit.

Sensor can be mounted on either side of unit by customer. Port side mounting shown.

*Shown with Hand Lever **H** Option. Hand Lever can be attached on either side of unit.*

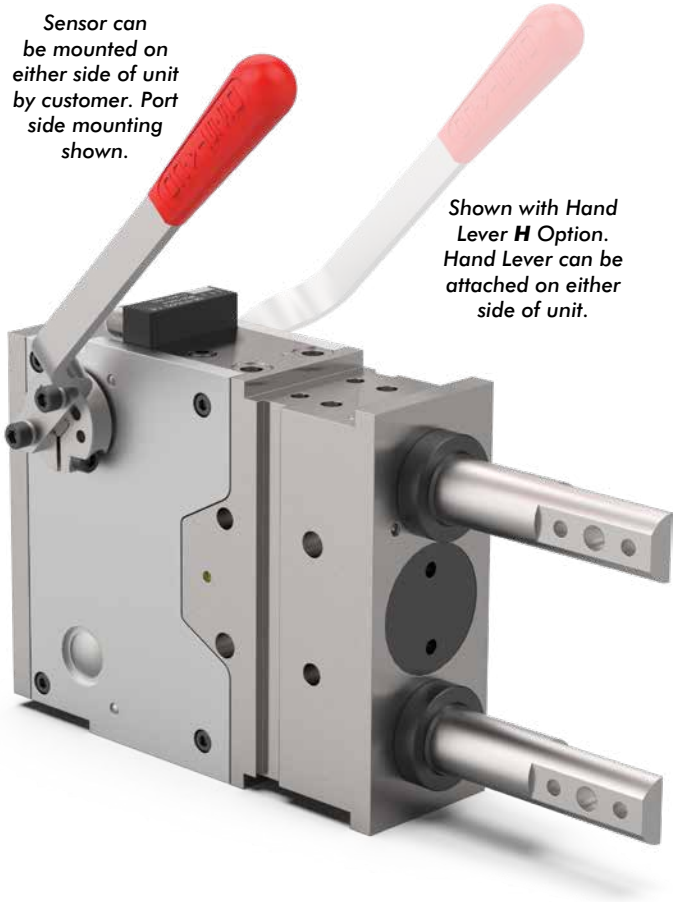

Sensor	Description
00	Without Sensing System
L8	PNP Sensor with In-line M12x1 Connector (8EA-146-4)
N8	NPN Sensor with In-line M12x1 Connector (8EA-154-4)
L9	PNP Sensor with 90° M12x1 Connector (8EA-147-4)
N9	NPN Sensor with 90° M12x1 Connector (8EA-155-4)
K8	PNP Sensor with M12x1 Cable Connector (8EA-158-4)
K9	NPN Sensor with M12x1 Cable Connector (8EA-167-4)

*Sensors can be mounted on opposite side by customer.

Dimensions and technical information are subject to change without notice

Pneumatic Pin Package | Dual Shaft | Dimensions and Technical Specifications

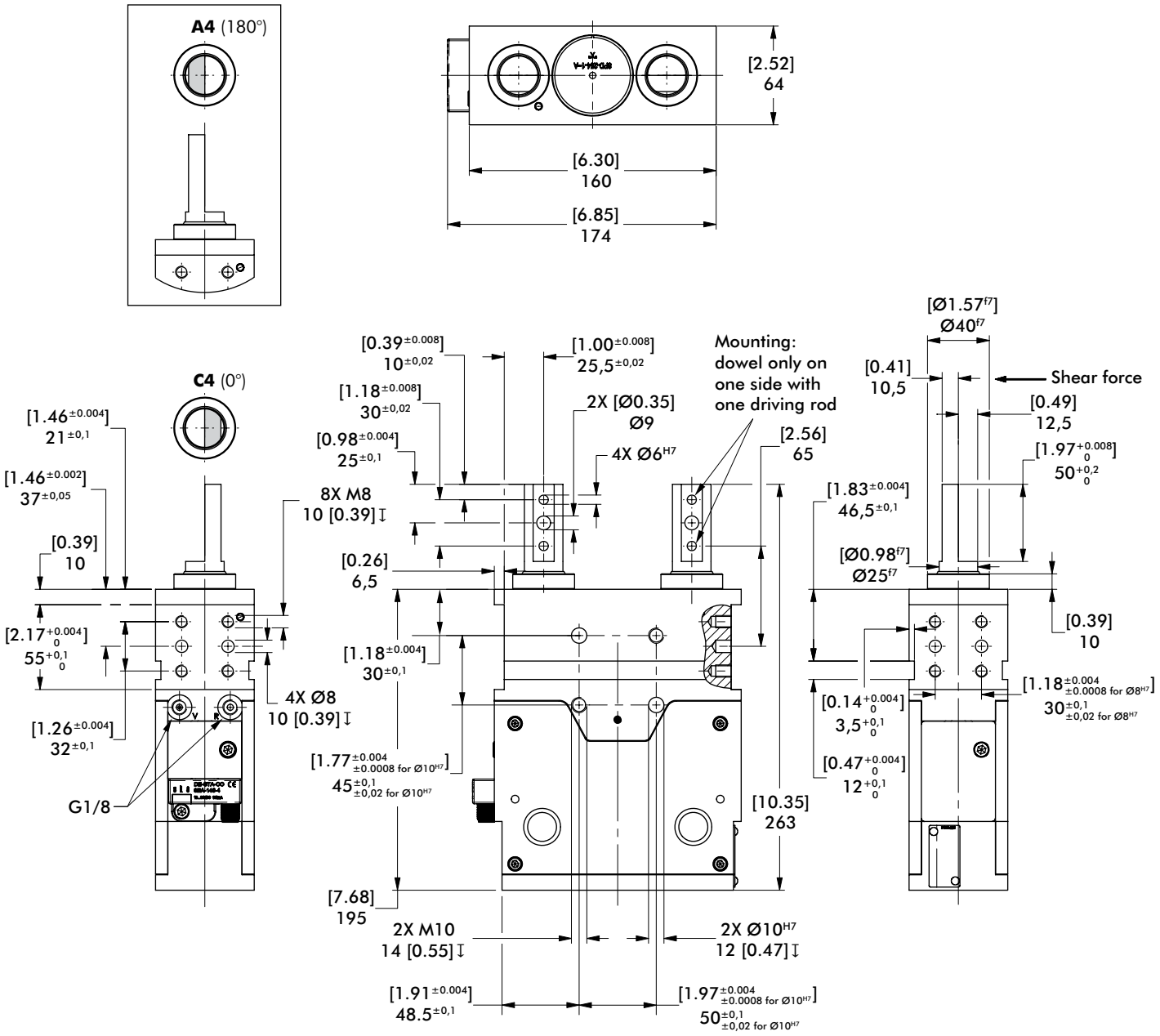

Medium: Operation with oil free air is permissible

Note: Extracting force and retracting force shown in this chart are only available with the last 2 mm stroke at extracted position. In the other range of the stroke the forces will be approximately 30% of value in the chart.

Base Model	Stroke mm [in]	Pushing Force at 6 bar N [lbf]	Retraction Force at 6 bar N [lbf]	Holding Force at 6 bar N [lbf]	Max. Operating Pressure bar [psi]	Piston Ø mm [in]	Weight Kg [lbs]	Air consumption per double stroke at 5 bar dm^3 [ft^3]
85D5-2	40 [1.57]	3500 [787]	2300 [517]	5000 [1124]	6 [87]	50 [1.97]	7,8 [17.20]	1,1 [0.04]

85D5-2 OPTIONS

Pneumatic Pin Package | Dual Shaft | Dimensions and Technical Specifications

H0 Standard Hand Lever

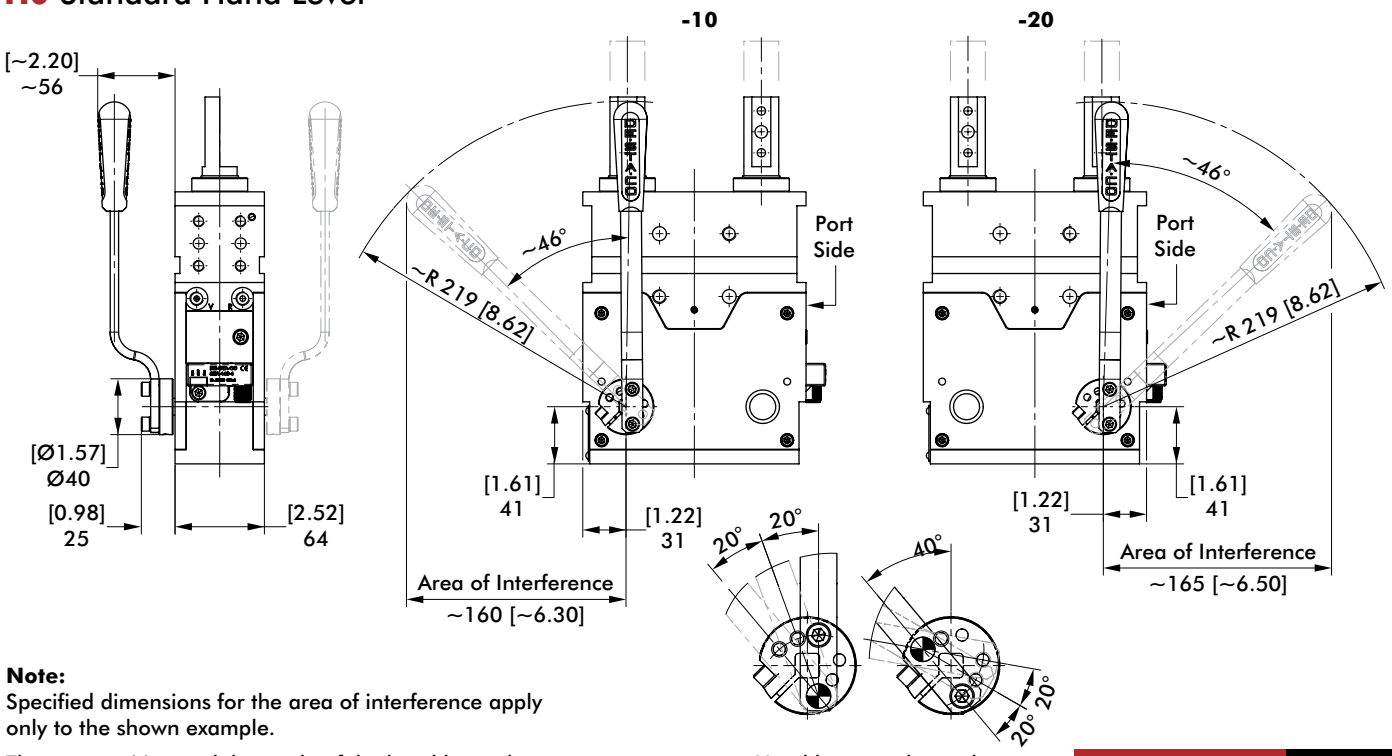

Note:
Specified dimensions for the area of interference apply only to the shown example.

The start position and the angle of the hand lever changes by mounting of the hand lever on the other side of the clamp or by rebuilding of the lever on the clamp piece.

Hand lever angle can be changed by further mounting options on the clamp piece

Model no.	Weight kg [lb]
85D5-2******H04	8,3 [18.29]

H0 Weldable Hand Lever

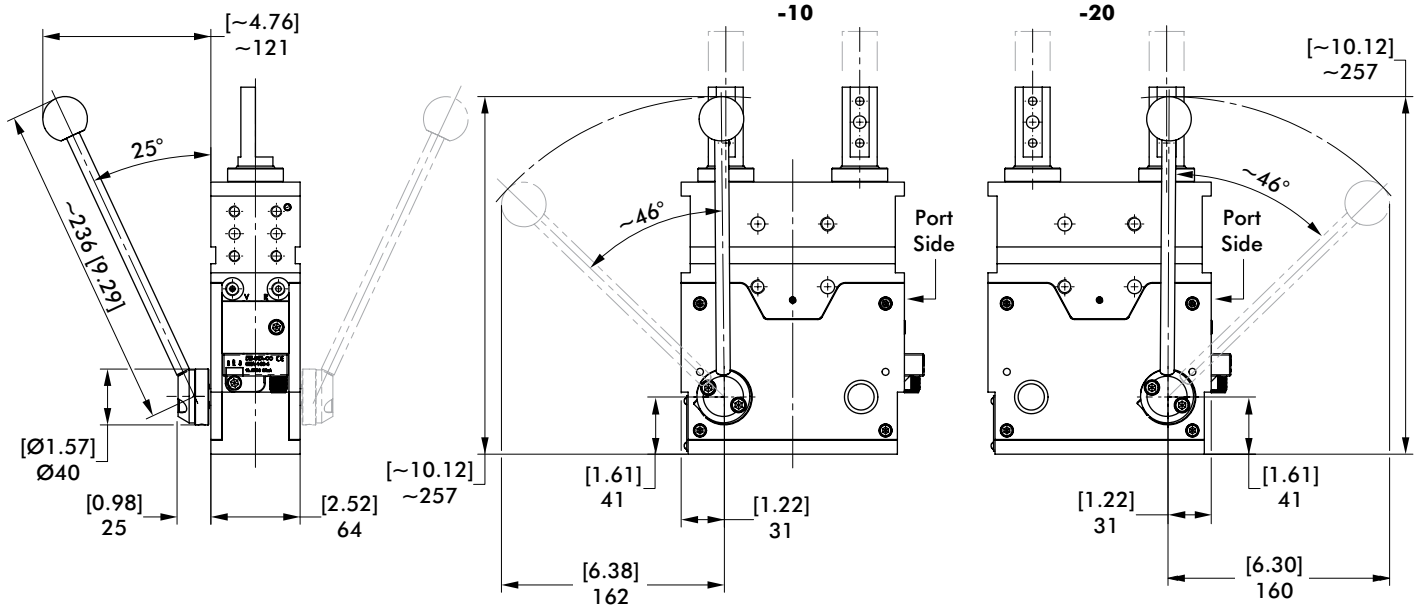

Note:
The view shows an example for a position of the welded hand lever.

The hand lever is delivered loose enclosed and can be welded bythe customer in the required position.Easy custom left hand or right hand mounting in required position.

Model no.	Weight kg [lb]
85D5-2******HS4	8,3 [18.29]

Pneumatic Pin Package | Dual Shaft | Dimensions and Technical Specifications

L8, N8 Inductive Sensing System

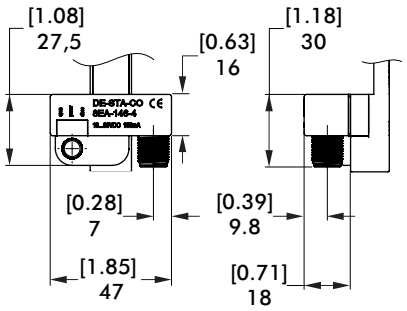

L9, N9 Inductive Sensing System with 90° Connector

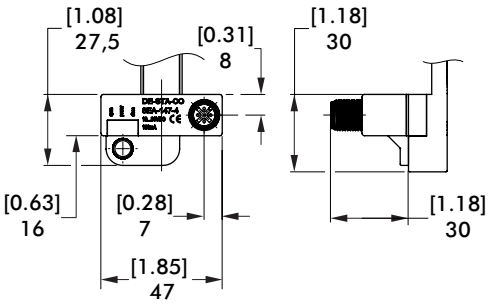

K8, K9 Inductive Sensing System with Pigtail Connector

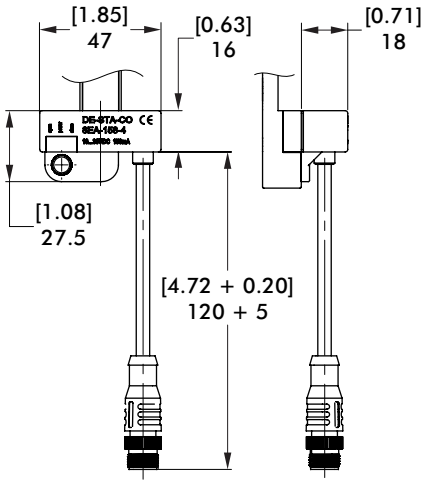

Inductive Sensor Wiring Diagram

Sensing system immune to interference from AC / DC arc welding.

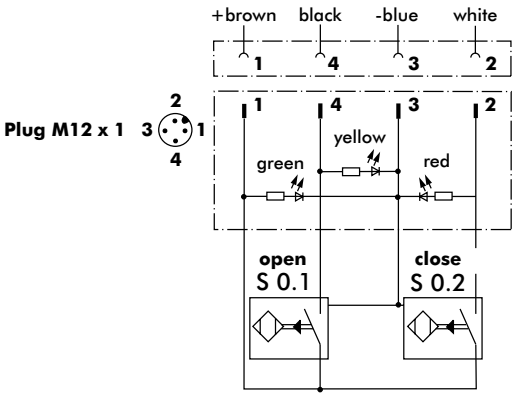

Sensor Cable Accessories

Sensor Cables (1 connector & 5m cable)	Order no.
M12x1 connector, straight, 5-pin	**8EL-002-1**
M12x1 connector, 90° angular, 4-pin	**8EL-003-1**

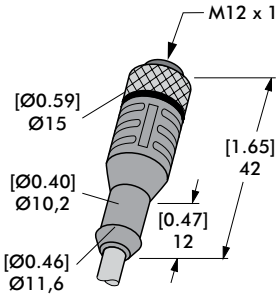

Straight Cable
8EL-002-1

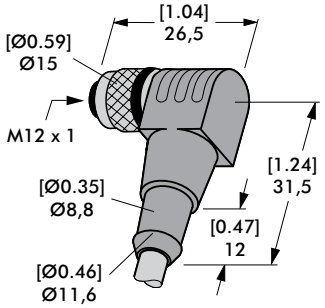

Angular Cable
8EL-003-1

86D40/86D60

Pneumatic Pin Package | Dual Shaft | Ordering Information

86D40 | **-1** | **A4** | **D8** | **00** | **A** | **K**

Plunger	Description
K	Ceramic Option for Piston Rod

Base Model	Description
86D40	40 mm Cylinder (G1/8 Port)
86D60	63 mm Cylinder (G1/4 Port)

Hand Lever	Description
-1	No Hand Lever
H1	Handle for Manual Control (86D60 only)

Accessories	Description
00	No Accessories
01	Locking Device for Retracted Position. Mountable on both sides (H1 only) (86D60H1000001)

Piston Rod	Description
04	NAAMS Standard
A4	NAAMS Standard Rotated 180°
11	Dual Bolt Mounting (86D40-1 Only)

Stroke	for 86D40
B	20 mm Stroke (86D40-1000000B)
A	40 mm Stroke (86D40-1000000A)

Stroke	for 86D60
B	20 mm Stroke (86D0-1000000B)
A	40 mm Stroke (86D0-1000000A)
C	60 mm Stroke (86D0-1000000C)

Sensor*	for 86D40
L4	Cover Plate (86D0-100L4)
D8	with 90° M12x1 Swivel Connector (86D40-100D8)

*Sensors can be mounted on opposite side by customer.

Sensor*	for 86D60
L6	Cover Plate (86D0-100L6)
D8	with 90° M12x1 Swivel Connector (86D0-100D8)

*Sensors can be mounted on opposite side by customer.

86D40 shown with sensor mounted on opposite side of unit.

86D40-1

Stroke Option: **A, B**

86D60-1

Stroke Option: **A, B, C**

Dimensions and technical information are subject to change without notice

Pneumatic Pin Package | Dual Shaft | Dimensions and Technical Specifications

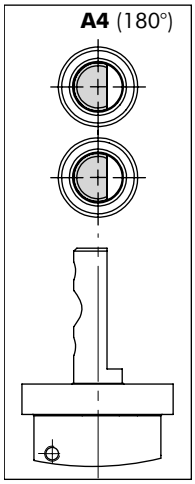

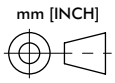

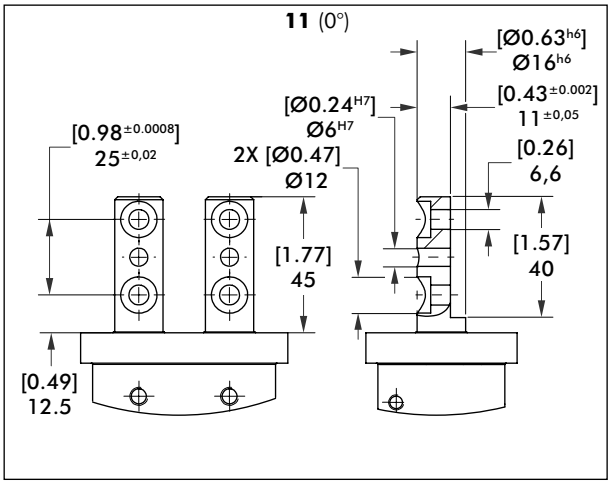

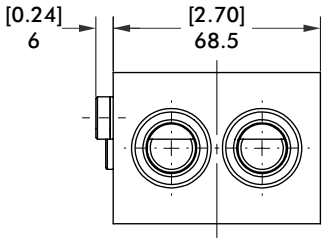

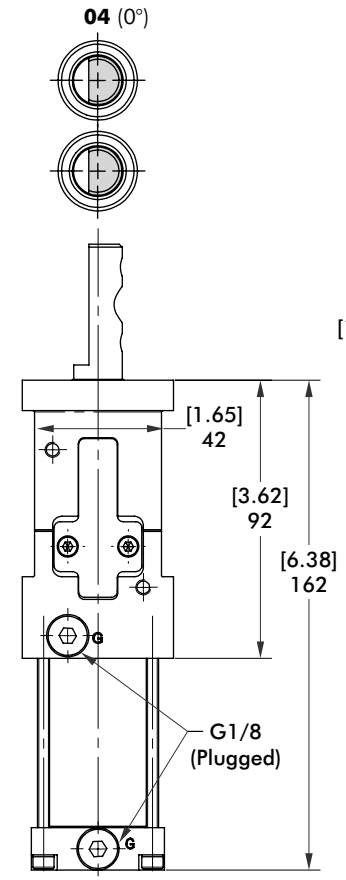

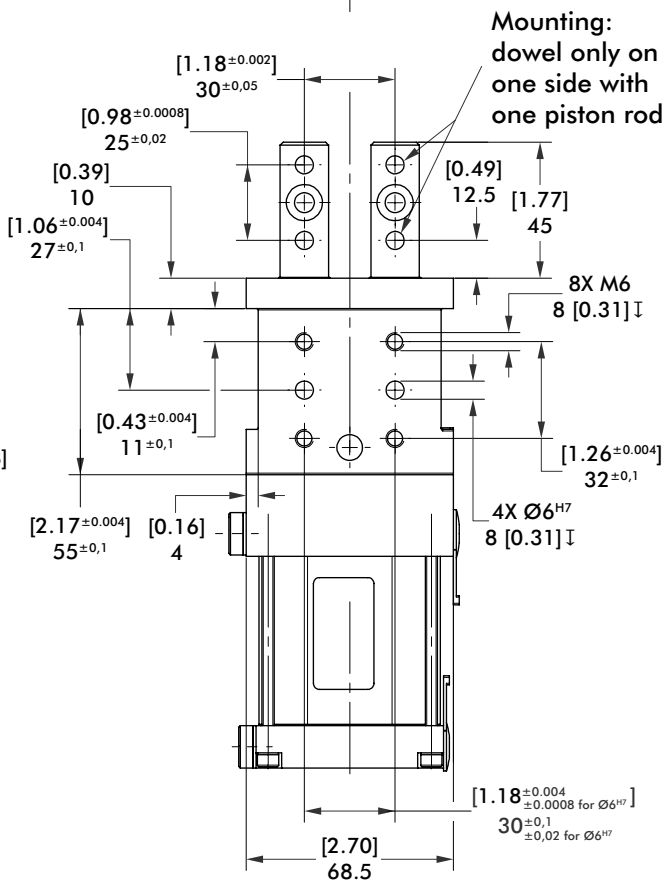

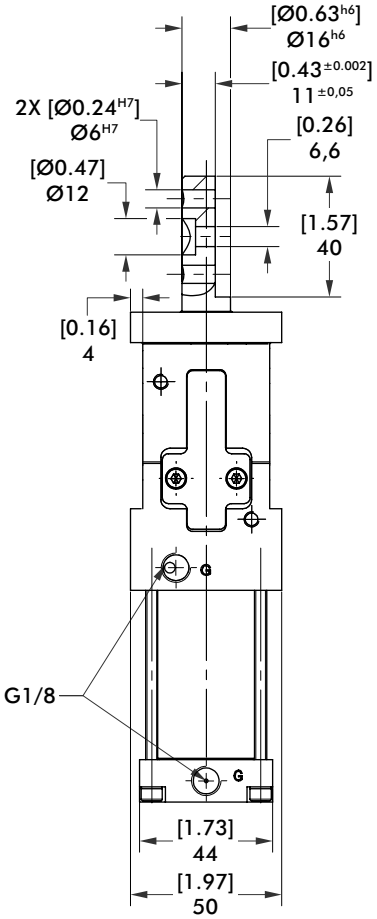

Base Model	Stroke +2 [0.08] mm [in]	Pushing Force at 5 bar N [lbf]	Retraction Force at 5 bar N [lbf]	Max. Operating Pressure bar [psi]	Piston Ø mm [in]	Weight Kg [lbs]	Air consumption per double stroke at 5 bar dm^3 [ft^3]
86D40-1.....A	40 [1.57]	700 [157]	600 [135]	6 [87]	40 [1.57]	1,5 [3.31]	0,75 [0.03]
86D40-1.....B	20 [0.79]						0,47 [0.02]

86D60

Pneumatic Pin Package | Dual Shaft | Dimensions and Technical Specifications

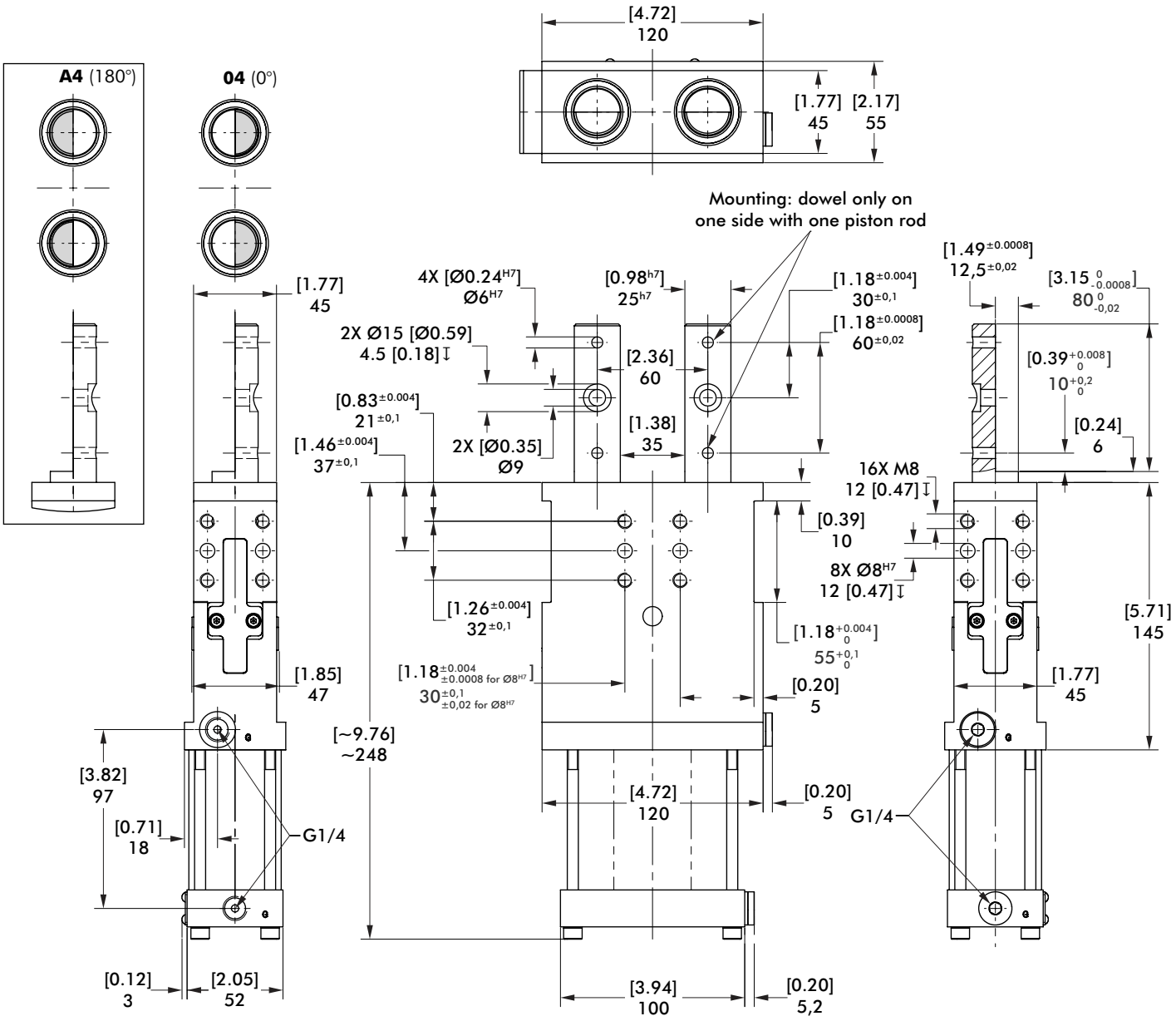

Base Model	Stroke Option	Stroke +2 [0.08] mm [in]	Pushing force at 5 bar N [lbs]	Retraction force at 5 bar N [lbs]	Max. operating pressure bar [psi]	Piston Ø mm [in]	Weight Kg [lbs]	Air consumption per double stroke at 5 bar dm^3 [ft^3]
86D60	B, 2	20 [0.79]	1500 [337]	1100 [247]	6 [87]	63 [2.48]	4 [8.82]	0,8 [0.028]
	A, 4	40 [1.57]						1,4 [0.049]
	C, 6	60 [2.36]						2,0 [0.070]

Dimensions and technical information are subject to change without notice

86D60H1

Pneumatic Pin Package | Dual Shaft | Dimensions and Technical Specifications

With Handle for Manual Control

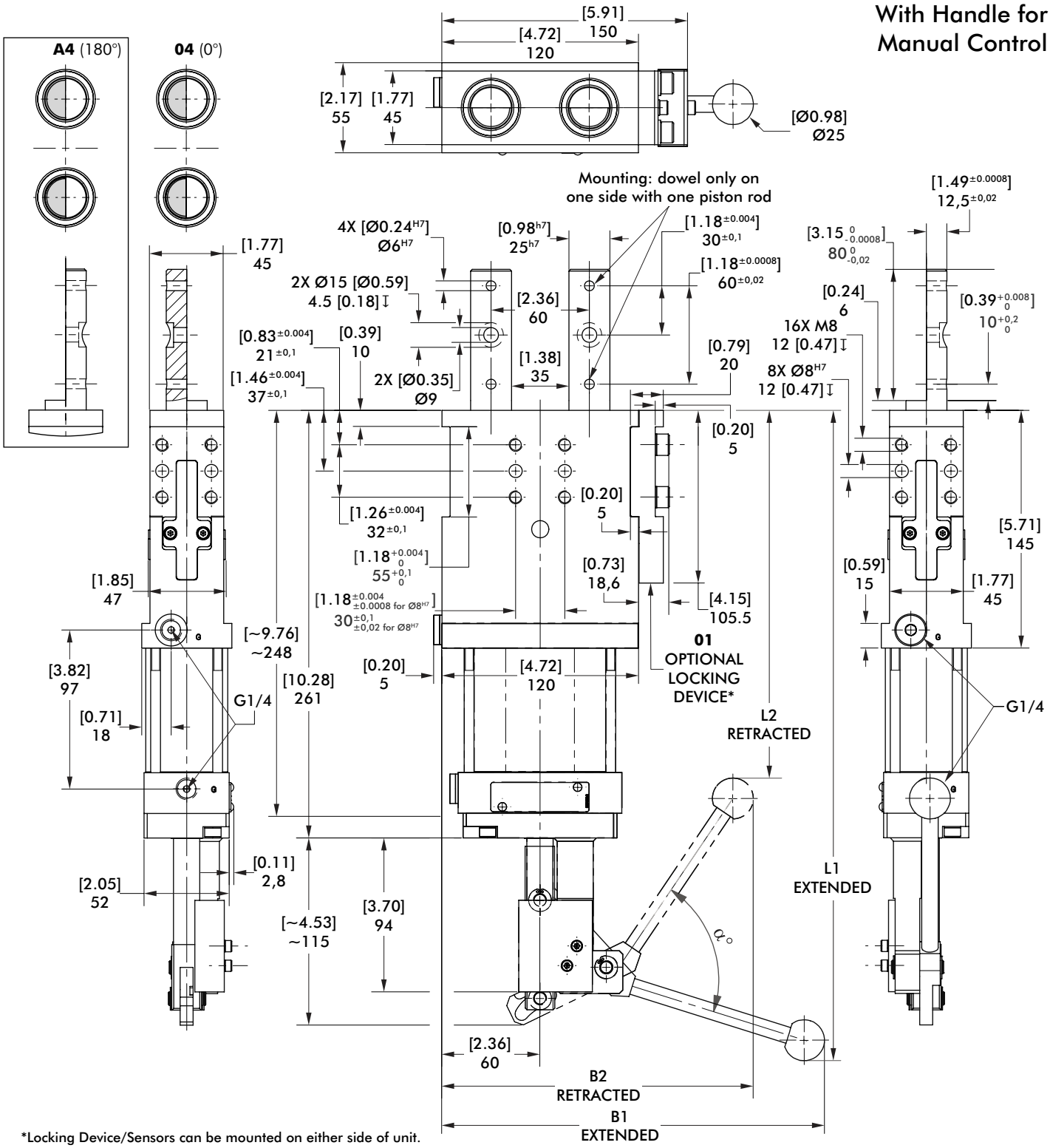

*Locking Device/Sensors can be mounted on either side of unit.

Base Model	Stroke Option	Stroke +2 [0.08] mm [in]	~B1 (extended) mm [in]	~B2 (retracted) mm [in]	~L1 (extended) mm [in]	~L2 (retracted) mm [in]	Opening Angle α	Weight Kg [lbs]
86D60H1	B, 2	20 [0.79]	242 [9.53]	190 [7.48]	351 [13.82]	224.5 [8.84]	52.6°	5,78 [12.74]
	A, 4	40 [1.57]	228 [8.98]		295 [11.61]		26.5°	5,79 [12.76]
	C, 6	60 [2.36]	234 [9.21]		397 [15.63]		73.3°	5,76 [12.69]

86D40/86D60 SENSORS

Pneumatic Pin Package | Dual Shaft | Dimensions and Technical Specifications

D8 Inductive Sensing System with 90° Swivel Connector

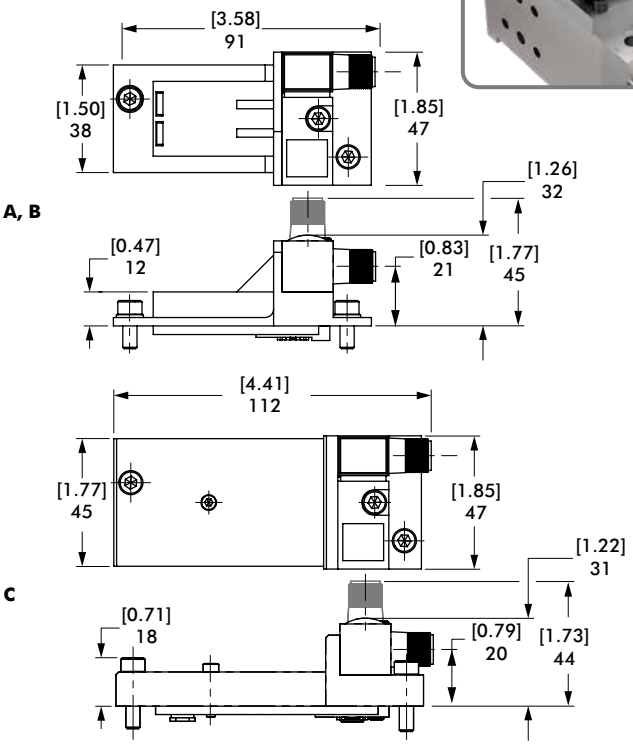

Inductive Sensor Wiring Diagram

Sensing system immune to interference from AC / DC arc welding.

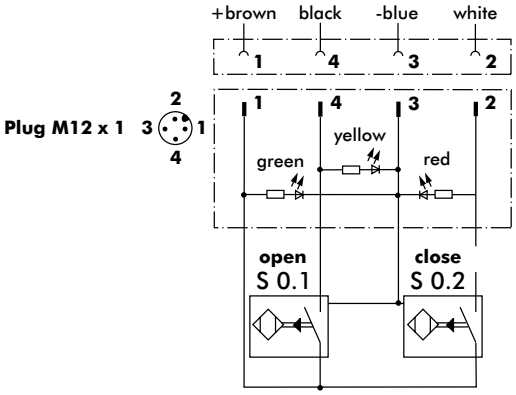

Dimensions and technical information are subject to change without notice

Notes

56D60-1

Manual Pin Package | Dual Shaft | Ordering Information

56D60-1 | 04 | D8 | 01 | A | K

Plunger	Description
K	Ceramic Option for Piston Rod

Piston Rod	Description
04	NAAMS Standard
A4	NAAMS Standard Rotated 180°

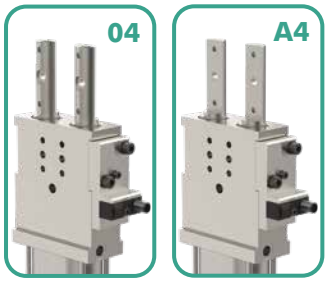

Accessories	Description
00	No Accessories
01	Locking Device for Retracted Position. Mountable on both sides (86D60H1000001)

Stroke	Description
B	20 mm Stroke (86D0-1000000B)
A	40 mm Stroke (86D0-1000000A)
C	60 mm Stroke (86D0-1000000C)

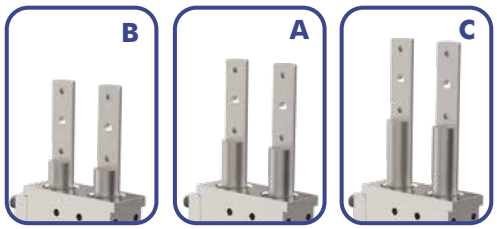

Sensor*	Description
L6	Cover Plate (86D0-100L6)
D8	with 90° M12x1 Swivel Connector (86D0-100D8)

*Sensors can be mounted on opposite side by customer.

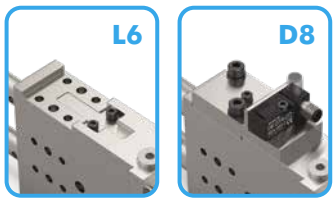

56D60-1

Stroke Option: **A, B, C**

Dimensions and technical information are subject to change without notice

Manual Pin Package | Dual Shaft | Dimensions and Technical Specifications

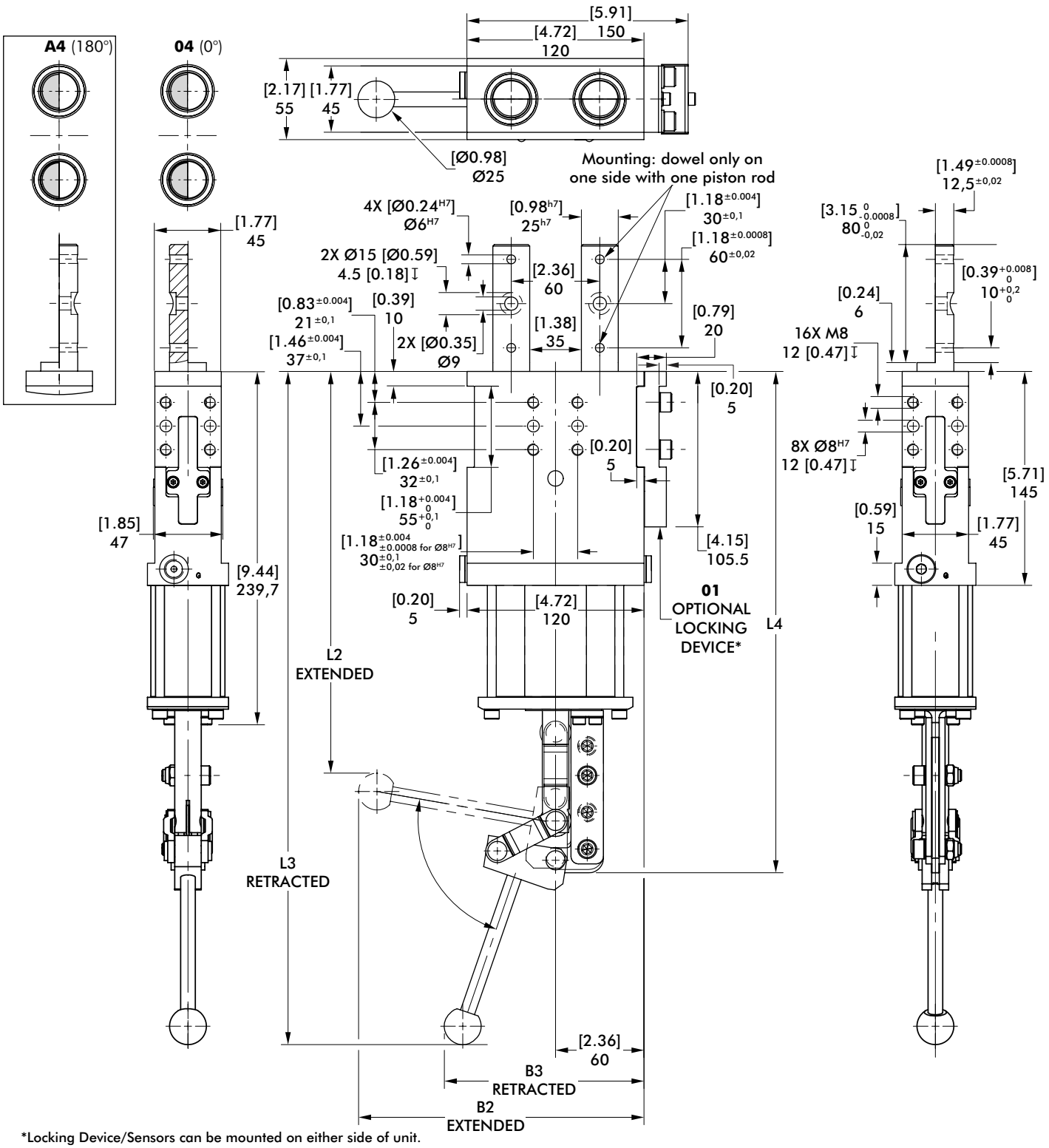

*Locking Device/Sensors can be mounted on either side of unit.

Base Model	Stroke Option	Stroke +2 [0.08] mm [in]	~B2 (extended) mm [in]	~B3 (retracted) mm [in]	~L2 (extended) mm [in]	~L3 (retracted) mm [in]	~L4	Opening Angle α	Weight Kg [lbs]
56D60H1	B	20 [0.79]	193 [7.60]	167 [6.57]	290 [11.42]	450 [17.72]	358 [14.09]	63.3°	5,78 [12.74]
	A	40 [1.57]	196 [7.72]	191 [7.52]	319 [12.56]	432 [17.01]	378 [14.88]	43°	5,79 [12.76]
	C	60 [2.36]	194 [7.64]	136 [5.35]	273 [10.75]	457 [17.99]	340 [13.39]	80.9°	5,76 [12.69]

56D60-1 SENSORS

Manual Pin Package | Dual Shaft | Dimensions and Technical Specifications

D8 Inductive Sensing System with 90° Swivel Connector

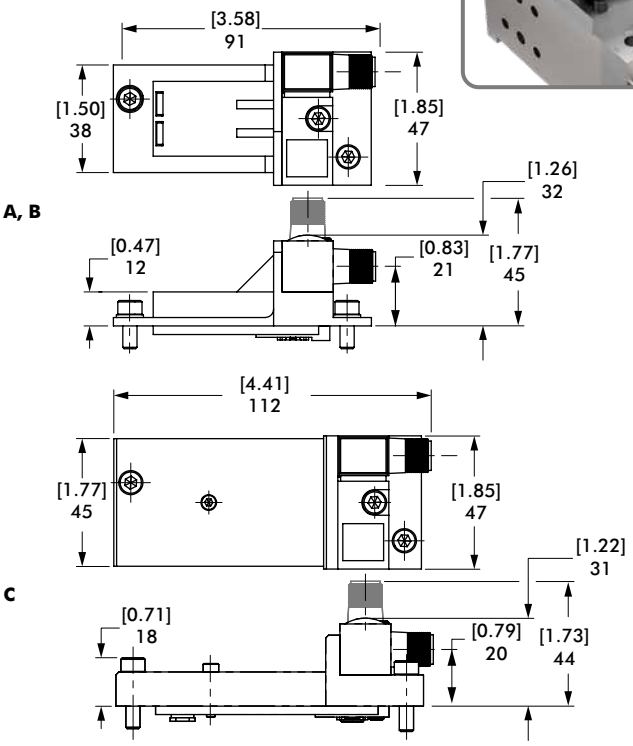

Inductive Sensor Wiring Diagram

Sensing system immune to interference from AC / DC arc welding.

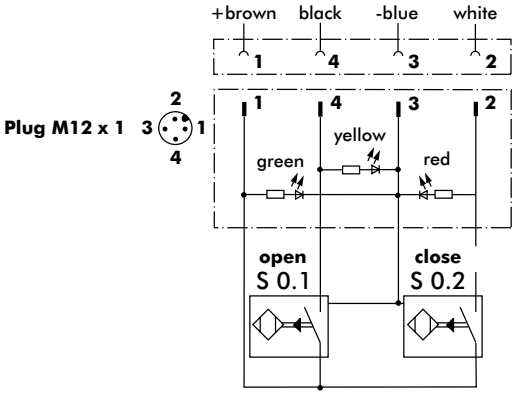

Dimensions and technical information are subject to change without notice

Notes